This is a digital copy of a book that was preserved for generations on library shelves before it was carefully scanned by Google as part of a project to make the world's books discoverable online.

It has survived long enough for the copyright to expire and the book to enter the public domain. A public domain book is one that was never subject to copyright or whose legal copyright term has expired. Whether a book is in the public domain may vary country to country. Public domain books are our gateways to the past, representing a wealth of history, culture and knowledge that's often difficult to discover.

Marks, notations and other marginalia present in the original volume will appear in this file - a reminder of this book's long journey from the publisher to a library and finally to you.

Usage guidelines

Google is proud to partner with libraries to digitize public domain materials and make them widely accessible. Public domain books belong to the public and we are merely their custodians. Nevertheless, this work is expensive, so in order to keep providing this resource, we have taken steps to prevent abuse by commercial parties, including placing technical restrictions on automated querying.

We also ask that you:

+ *Make non-commercial use of the files* We designed Google Book Search for use by individuals, and we request that you use these files for personal, non-commercial purposes.
+ *Refrain from automated querying* Do not send automated queries of any sort to Google's system: If you are conducting research on machine translation, optical character recognition or other areas where access to a large amount of text is helpful, please contact us. We encourage the use of public domain materials for these purposes and may be able to help.
+ *Maintain attribution* The Google "watermark" you see on each file is essential for informing people about this project and helping them find additional materials through Google Book Search. Please do not remove it.
+ *Keep it legal* Whatever your use, remember that you are responsible for ensuring that what you are doing is legal. Do not assume that just because we believe a book is in the public domain for users in the United States, that the work is also in the public domain for users in other countries. Whether a book is still in copyright varies from country to country, and we can't offer guidance on whether any specific use of any specific book is allowed. Please do not assume that a book's appearance in Google Book Search means it can be used in any manner anywhere in the world. Copyright infringement liability can be quite severe.

About Google Book Search

Google's mission is to organize the world's information and to make it universally accessible and useful. Google Book Search helps readers discover the world's books while helping authors and publishers reach new audiences. You can search through the full text of this book on the web at `http://books.google.com/`

B 1,143,795

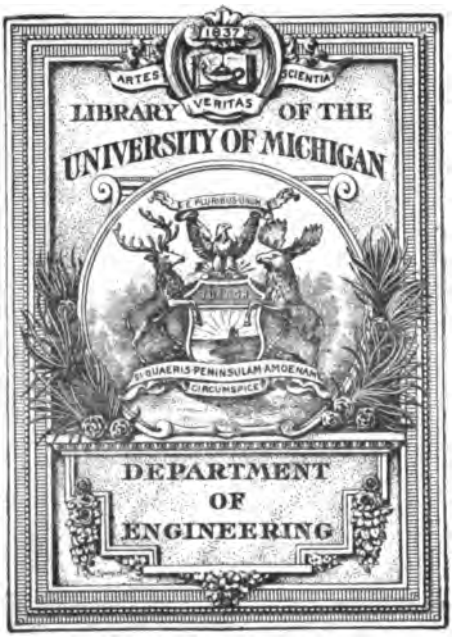
1837
ARTES
VERITAS
SCIENTIA
LIBRARY OF THE
UNIVERSITY OF MICHIGAN
E PLURIBUS UNUM
TUEBOR
SI QUAERIS PENINSULAM AMOENAM
CIRCUMSPICE
DEPARTMENT
OF
ENGINEERING

LIBRARY
VM
1
.N87

TRANSACTIONS

OF THE

NORTH-EAST COAST INSTITUTION

OF

ENGINEERS AND SHIPBUILDERS.

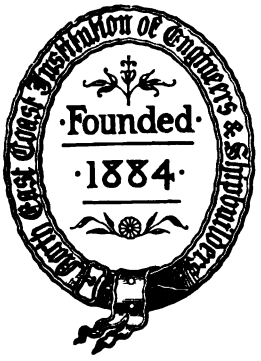

EDITED BY THE SECRETARY OF THE INSTITUTION.

VOLUME XXII.

TWENTY-SECOND SESSION, 1905-1906.

THE RIGHT OF PUBLICATION AND TRANSLATION IS RESERVED.

NEWCASTLE-UPON-TYNE AND LONDON:
ANDREW REID & COMPANY, LIMITED, PRINTERS AND PUBLISHERS.

1906.

ADVERTISEMENT.

"The Institution merely places on record, and is not, as a body, responsible for the statements or opinions advanced in the Papers read, or the Discussions thereon, which occur at the Meetings during the Session."

CONTENTS OF VOLUME XXII.

TWENTY-SECOND SESSION, 1905-1906.

	PAGE.
Alphabetical List of Names of Writers of Papers and Speakers	v
,, Officers, 1905-1906	vii
,, Committees, etc., 1905-1906	viii
,, Honorary Members	ix
,, Members, July, 1906	ix
,, Associates ,, ...	xxxvi
,, Graduates ,, ...	xl
Proceedings at General Meetings	1, 51, 83, 107, 149, 179, 189
Council Report for Twenty-first Session 1904-1905	5
Financial Statement	9
Institution Dinner	33
Sessional Awards	150
Presentation to the Secretary	199
Closing Business of the Session	205
Report of Work of the Consultative Committee appointed to confer with the Marine Department of the Board of Trade	207
MEMOIRS	218

PAPERS READ DURING THE SESSION.

1905.	
Nov. 24th.—PRESIDENT'S OPENING REMARKS, by the Right Hon. Lord Armstrong, M.A., D.C.L.	13
"PNEUMATIC TOOLS AS APPLIED TO SHIP CONSTRUCTION AND THEIR ADVANTAGES TO SHIPBUILDERS AND ENGINEERS," by C. Schofield	15
Discussion	27
Discussion resumed	53, 85
Mr. C. Schofield's reply	85
Dec. 15th.—"THE ENGINEERING VALUE OF LUBRICATING OILS," by W. F. Parish, Jun.	61
Discussion	82
Discussion resumed	101, 109
Mr. W. F. Parish's Reply	115
1906.	
Feb. 16th.—"COMMERCIAL DRY DOCKS," by J. Mitchell Moncrieff ...	123
Discussion	140
Discussion resumed	151
Mr. J. M. Moncrieff's Reply	191
Mar. 16th.—"THE LONDON COUNTY COUNCIL PASSENGER STEAMERS," by Archibald Hogg	171
Discussion	175
Discussion resumed	181
Mr. Archibald Hogg's Reply	195

PAPERS READ BEFORE THE GRADUATE SECTION.

1903.	
Oct. 31st.—"PRODUCER GAS AND ITS USES," by W. H. Waddingham	229
1905.	
Mar. 11th.—"MARINE EVAPORATORS," by John Neill	241

177253

LIST OF PLATES.

Plates to Illustrate Papers on –	Plates.
"Pneumatic Tools as Applied to Ship Construction"	I. to VIII.
"Commercial Dry Docks"	IX. to XVII.
"The London County Council Passenger Steamers"	XVIII. to XXI.
"Producer Gas and its Uses"	XXII. to XXVII.
"Marine Evaporators"	XXVIII.

ALPHABETICAL LIST OF WRITERS OF PAPERS AND SPEAKERS.

Name.	Name of Paper or Subject under Discussion.	Page.
Alexander, F. H.	London County Council Passenger Steamers	175
Andrew, D.	Pneumatic Tools	58
Andrew, D., jun.	Pneumatic Tools	85
Armstrong, Lord	President's Opening Remarks	13
,,	Institution Dinner	33, 36, 42
Baterden, J. R.	Commercial Dry Docks	146
Boyd, W.	Institution Dinner	43
,,	Presentation to Secretary	199
Box, E.	Commercial Dry Docks	151
Brown, M. Walton	Institution Dinner	49
Carter, G. J.	Pneumatic Tools	30
Cherry, T. W.	London County Council Passenger Steamers	183
Clarke, E. P.	Lubricating Oils	105
Clarke, J. H.	Lubricating Oils	113
Duckitt, J.	Presentation to Secretary	202
Dugdale, W. H.	Commercial Dry Docks	163
Ellis, Sir Joseph, Lord Mayor of Newcastle-upon-Tyne	Institution Dinner	47
Fothergill, J. R.	Vote of Thanks to President	3
,,	Presentation to Secretary	199, 202
,,	Close of Session	206
Harrison, A.	Vote of Thanks to Presentation Committee	204
Heck, J. H.	Pneumatic Tools	53
Henzell, R.	Lubricating Oils	103
Hogg, Archibald	London County Council Passenger Steamers	171
,,	Reply to Discussion on London County Council Passenger Steamers	195
Hunter, S.	Vote of Thanks to Presentation Committee	204
James, M. C.	Commercial Dry Docks	140
Jarvis, H. R.	Commercial Dry Docks	166
Little, F.	Lubricating Oils	106
M'Kenna, F.	Lubricating Oils	82
Middleton, R. A.	London County Council Passenger Steamers	181
Moncrieff, J. M.	Commercial Dry Docks	123
,,	Reply to Discussion on Commercial Dry Docks	191
Morison, D. B.	Lubricating Oils	101
Neill, J.	Marine Evaporators	241
Pariah, W. F., jun.	The Engineering Value of Lubricating Oils	61
,,	Reply to Discussion on Lubricating Oils	115
Plummer, Sir Walter	Institution Dinner	39

Name.	Name of Paper or Subject under Discussion.	Page.
Renwick, G.	Institution Dinner	37
Sandeman, J. Watt	Commercial Dry Docks	143
Schofield, C.	Pneumatic Tools as Applied to Ship Construction	15
,, ...	Reply to Discussion on Pneumatic Tools ...	85
,, ...	Commercial Dry Docks	160
Spence, W. G. ...	Pneumatic Tools	100
,, ...	Lubricating Oils	103
Swan, Col. H. F. ...	Institution Dinner	35
Thomson, H. ...	Pneumatic Tools	56
Twaddell, J. L. ..	Pneumatic Tools	27
Vardy, G.	Pneumatic Tools	56
Waddingham, W. H.	Producer Gas and its Uses	229
Walker, James ...	Institution Dinner	45
Wallace, J., Sheriff of Newcastle-on-Tyne	Institution Dinner	48
Weir, G. D.	Lubricating Oils	109
White, Col. R. Saxton	Institution Dinner	46
,, ...	Commercial Dry Docks	168
,, ...	London County Council Passenger Steamers ...	178

LIST OF OFFICERS, &c.

TWENTY-SECOND SESSION, 1905–1906.

President:

THE RIGHT HONOURABLE LORD ARMSTRONG, M.A., D.C.L., D.L., J.P.

Past-Presidents:

ALDERMAN WILLIAM BOYD, J.P. (1884-1886).

SIR W. THEODORE DOXFORD, M.P., J.P. (1886-88).

F. C. MARSHALL (1888-90).

WIGHAM RICHARDSON, J.P. (1890-92).

ROBERT THOMPSON, J.P. (1892-1894).

SIR THOMAS RICHARDSON, B.A., J.P. (1894-96).

COL. HENRY F. SWAN, C.B., J.P. (1896-1898).

SIR BENJAMIN C. BROWNE, D.C.L., J.P. (1898-1900).

HENRY WITHY, J.P. (1900-02).

JOHN TWEEDY, J.P. (1902-04).

Vice-Presidents:

G. H. BAINES, J.P.
W. C. BORROWMAN, Wh. Sch.
ERNEST H. CRAGGS.
JOHN DICKINSON, J.P.
C. D. DOXFORD, J.P.
W. H. DUGDALE.
J. R. FOTHERGILL.
J. H. HECK.
SUMMERS HUNTER.
JAMES MARR.
D. B. MORISON, J.P.
ROBERT HOME MUIR.
JOSEPH M. RENNOLDSON, J.P.
H. B. ROWELL.
G. W. SIVEWRIGHT.
W. G. SPENCE.
T. WESTGARTH, J.P.
R. L. WEIGHTON, M.A.

Honorary Treasurer:—G. E. MACARTHY.

Councilmen:

DAVID ANDREW.
CHARLES A. BUSHELL.
GEORGE J. CARTER.
ALFRED HARRISON.
M. C. JAMES.
HUGH LAING.
D. R. MACDONALD.
Hon. C. A. PARSONS, C.B., M.A., F.R.S.
NATHANIEL E. ROBSON.
R. ROPNER, Jun., J.P.
W. SWINNEY.
HENRY WALKER.
ROBERT WALLIS.
GEORGE D. WEIR.
R. SAXTON WHITE.

Secretary and Treasurer:—JOHN DUCKITT.

4, St. Nicholas' Buildings West, Newcastle-upon-Tyne.

Graduate Section:

Chairman—KENNETH WATSON.

Hon. Secretary—ALEC. TCHIGIANOFF.

Committee

G. M. BROWN.
H. J. COX.
T. C. FORTUNE.
E. J. MCWILLIAMS.
JOHN NEILL.
JOHN E. SMITH.
P. WEBSTER.

COMMITTEES.

TWENTY-SECOND SESSION, 1905–1906.

The President is *ex officio* a Member of all Committees.

Finance Committee:

ALD. WILLIAM BOYD (Chairman).

W. H. DUGDALE.
J. R. FOTHERGILL.
J. M. KRESSOLDSON.
H. B. ROWELL.
ROBERT THOMPSON.
GEORGE E. MACARTHY (Hon. Treasurer).

Reading Committee:

J. H. HECK.
R. KOPPER, JUNR.
HENRY WALKER.
R. WALLIS.
G. D. WEIR.
R. SAXTON WHITE.

Library Committee:

W. C. BORROWMAN (Chairman).

C. A. BUSHELL.
J. H. HECK.
J. C. STIRZAKER.
R. WALLIS.

Graduates' Award Committee:

J. H. HECK.
M. C. JAMES.
W. G. SPENCE.
HENRY WALKER.
R. L. WEIGHTON, M.A.

Educational Committee:

W. C. BORROWMAN.
W. H. DUGDALE.
J. R. FOTHERGILL.
G. B. HUNTER.
SUMMERS HUNTER.
JAMES MARR.
D. B. MORISON.
ROBERT THOMPSON.
JOHN TWEEDY.
R. WALLIS.
R. L. WEIGHTON, M.A.
HENRY WITHY.

Measured Mile-Posts' Committee:

C. A. BUSHELL.
W. H. DUGDALE.
JAMES MARR.
W. G. SPENCE.
ROBERT THOMPSON.
JOHN DUCKITT.

Representative on Inst. of Civil Engineers Educational Committee:

R. L. WEIGHTON, M.A.

Representatives on Lloyd's Sub-Committee:

W. H. DUGDALE.
J. W. REED.
JOHN TWEEDY.
HENRY WITHY.

Representatives on the Consultative Committee to the Board of Trade:

W. H. DUGDALE.
J. H. IRWIN.
GEORGE JONES.
D. B. MORISON.

Representative on Council of Armstrong College:

RIGHT HON. LORD ARMSTRONG.

Representatives on the Armstrong College Metallurgical Education Committee:

GEORGE CLARK.
HENRY WITHY.

Representatives on Committees on Standard Sections:

HENRY WITHY. | SUMMERS HUNTER. | ANDREW LAING.

NORTH-EAST COAST INSTITUTION OF ENGINEERS AND SHIPBUILDERS.

List of Members, July, 1906.

EXPLANATION.

(A.)	Agent and Accountant.	(I. & S. M.)	Iron and Steel Merchants and Manufacturers.
(B. B.)	Boiler Builder.	(M.)	Merchant.
(C. E.)	Civil and Consulting Engineer.	(M. S.)	Marine Superintendent.
(E.)	Engineer and Boilermaker.	(N. A.)	Naval Architect.
(E. A.)	Engineering Agent.	(R. M.)	Rope Manufacturer.
(E. E.)	Electrical Engineer.	(S.)	Shipbuilder.
(F. M.)	Forge Master.	(S. O.)	Ship Owner.
(F.)	Iron and Brass Founder.	(SUR.)	Engineer & Ship Surveyor.

HONORARY MEMBERS.

		ELECTED.
Sir W. H. White, K.C.B., LL.D., F.R.S., Cedarcroft, Putney Heath, London, S.W.	(N A)	Nov. 1884
The Right Honourable Lord Linlithgow, G.C.M.G., Hopetoun House, South Queensferry, N.B....		Nov. 1897
The Right Honourable the Earl of Glasgow, G.C.M.G., LL.D., Fairlie Craig, Fairlie, Ayrshire		April 1902
The Right Honourable Lord Armstrong, M.A., D.C.L., D.L., J.P., Cragside, Rothbury		Feb. 1904
Sir Andrew Noble, Bart., K.C.B., F.R.S., Jesmond Dene House, Newcastle-upon-Tyne		Mar. 1904

MEMBERS.

A.

Abbot, Henry, Eng-Lieut., R.N., c/o Mrs. Sparkes, Shrublands, Woolston, Southampton	(E)	Nov. 1903
Adams, Cecil T., c/o Messrs. The N.E. Marine Engineering Co., Sunderland Works, Sunderland	(E)	Graduate, Oct. 1891 Member, Nov. 1897
Adamson, Chas. P., c/o Messrs. Hawthorns & Co., Engineers, Leith, N.B.	(E)	Graduate, Nov. 1897 Member, April 1901
Adamson, Daniel, c/o Messrs. Joseph Adamson & Co., Hyde, Cheshire	(E)	Graduate, Feb. 1888 Member, Oct. 1894
Adamson, David, 6, Grosvenor Road, Newcastle-upon-Tyne ...	(E D)	Nov. 1905
Adamson, Henry, Supt. Eng., Adelaide S.S. Co., 6, Bridge Street, Sydney	(E)	Oct. 1902
Agnew, T., Eng.-Capt., R.N., H.M. Steam Reserve, Malta ...	(E)	Nov. 1903
Aisbitt, Matthew Wheldon, 47, Mount Stuart Square, Cardiff ...	(N A)	Oct. 1895
Alder, Sydney, 34, King Street, South Shields	(C E & N A)	Nov. 1893

ELECTED.

Alexander, Francis H., Armstrong College, Barras Bridge, Newcastle-upon-Tyne ... ... (NA) Dec. 1902
Allan, George J., 35, Melrose Avenue, Monkseaton, Northumberland (E) Nov. 1898
Allan, Jas. McNeal, Belle Vue House, Low Fell, Gateshead-on-Tyne (E) Dec. 1886
Allan, John, c/o Messrs. Lloyd's Register of Shipping, 56, John Street, Sunderland ... ... (S) Jan. 1900
Allan, Percy F., c/o Messrs. Yarrow & Co., Scotstoun, Glasgow ... ... (E E) { Graduate, Nov. 1901 / Member, Nov. 1905
Allardes, Wm., c/o Messrs. Harland & Wolff, Ltd., Engine Works, Belfast ... ... (E) Nov. 1884
Anderson, Joseph, 5, Westfield Terrace, Wallsend-on-Tyne ... (E) Nov. 1884
Anderson, Thos. James, Cotton Exchange Building, Galveston, Texas, United States of America ... ... (E SUR) Mar. 1898
Andrew, D., 33, Osborne Road, Jesmond, Newcastle-upon-Tyne ...(SUR) Jan. 1885
Andrew, David, jun., c/o Messrs. The Globe Pneumatic Engineering Co., Ltd., 116, Hope Street, Glasgow (E) { Graduate, Jan. 1898 / Member, Dec. 1903
Andrew, John Davies, 33, Osborne Road, Newcastle-upon-Tyne ... ... (E) { Graduate, Jan. 1898 / Member, Jan. 1906
Andrews, Jas., Rinnoul, Myrtle Avenue, Lenzie, nr. Glasgow ... (E) Nov. 1884
Angus, John Chas., County Hotel, Hebburn-on-Tyne ... ... (E) Nov. 1899
Angus, W. J., Messrs. Vickers, Sons & Maxim, Naval Construction Works, Barrow-in-Furness ... ... (E) Oct. 1892
Arkins, Walter, 12, Laverton Street, Williamstown, Victoria, Australia ... ... (M E) Nov. 1905
Armstrong, Adam Latimer, 42, Percy Park, Tynemouth ... ... (S) April 1901
Armstrong, Joseph, 50, High Southwick, Sunderland ... ... (S) Nov. 1892
Armstrong, R. B., Farne House, Stannington Avenue, Heaton, Newcastle-upon-Tyne ... ... (E) Oct. 1887
Armstrong, Walter, 14, Elwin Terrace, Sunderland... ... ... (S) May 1899
Ascroft, Frederick W., 11 Park Street, Lytham ... ... (E) May 1900
Atherton, William Henry, M.Sc., The Plantation, 101, Whitaker Road, Derby ... ... (E) Oct. 1891
Atkinson, Alfred, c/o Messrs. Clark, Chapman & Co., Victoria Works, Gateshead-on-Tyne ... ... (E) May 1901
Atkinson, George H., 3, Acclom Street, Hartlepool ... ... (E) Nov. 1898
Atkinson, John Joseph, 7, Swiss Road, Elm Park, Fairfield, Liverpool ... ... (E) Mar. 1891
Avery, Thomas, R.I.M. Dockyard, Kidderpore, Calcutta ... ... (NA) Nov. 1903

B.

Baber, Samuel Ernest, "Springdale," Charlton Road, Keynshaw, Bristol ... ... () Nov. 1901
Baggallay, Robert, Messrs. Flannery, Baggallay & Johnson, 9, Fenchurch Street, London, E.C. ... ...(C E) May 1902
Bagnall, T. W., The Groves, Winlaton ... ...(F M) Nov. 1893
Bailey, Charles H., Tyne Engine Works, Newport, Mon. ... ... (E) Mar. 1896
Bailey, James, 3, South Avenue, Ryton-on-Tyne ... ... (E) Nov. 1884
Bailey, James T., c/o Messrs. Swan Hunter & Wigham Richardson, Ltd., Neptune Works, Low Walker ... ... (E) Feb. 1899
Baines, Geo. Henry, c/o Messrs. W. Gray & Co., Central Marine Engine Works, West Hartlepool ... ... (E) Oct. 1888

ELECTED.

Baird, Alexander, 23, Roxburgh Terrace, Whitley Bay ... ... (E) Oct. 1898
Baird, George, 16, Hylton Terrace, North Shields ... ... (E) Oct. 1892
Baker, E. F., Eng.-Lieut., R.N., Messrs. The Greenock Foundry Co., Greenock ... ... (E) { Graduate, Nov. 1892; Member, Feb. 1898
Ball, Ralph H. C., Eng.-Com. R.N., c/o Messrs. Sir W. G. Armstrong, Whitworth & Co., Openshaw, Manchester ... ... (E) Nov. 1905
Barber, Wm. Daglish, 120, Tosson Terrace, Heaton, Newcastle-upon-Tyne ... ... (S) Oct. 1902
Barker, John H., 2, Collingwood Street, Newcastle-on-Tyne (C E) Nov. 1904
Barley, C. J., Point House, Blackheath, Greenwich, London, S.E. ... ... (E) { Graduate, Feb. 1885; Member, Dec. 1886
Barr, Robert Houston, 46, Kelly Street, Greenock, N.B. (E) { Graduate, Nov. 1901; Member, Dec. 1903
Barrett, A., Highfield, Hutton Avenue, West Hartlepool ... (E) May 1896
Bateman, John, South Vane Terrace, Darlington ... ... (E) Mar. 1901
Batey, John Thomas, 52, Queen's Road, Jesmond, Newcastle-upon-Tyne ... ... (S) Nov. 1885
Batliboi, Jehangir Framji, 49, Forbes Street Fort, Bombay ... (E) Dec. 1888
Baxter, J., 26, Simonside Terrace, Heaton, Newcastle-upon-Tyne (E) Nov. 1884
Beckett, W. H., Eng.-Lieut., R.N., Controller's Department, The Admiralty, Whitehall, London, S.W. ... . (E) Dec. 1903
Belford, David, 15, Eldon Place, Newcastle-upon-Tyne ... ... (E) Nov. 1905
Bell, Geo. Arthur. 6, Esplanade Place, Whitley Bay, Northumberland ... ... (E) { Graduate, Oct. 1890; Member, Jan. 1894
Bell, Joshua Robson, 40, Hill Street, Jarrow-on-Tyne ... ... (S) Mar. 1899
Bell, William, Messrs. Cleland's Graving Dock and Slipway Co., Willington Quay-on-Tyne ... ... (E) Nov. 1888
Bennett, Percy M., c/o Messrs. Callender's Construction Co., Ltd., Hamilton House, Victoria Embankment, London, E.C. ... (E E) Dec. 1899
Berkley, A. B., 8, Camden Terrace, Clifton Vale, Bristol ... ... (E) Mar. 1887
Berven, Ferdinandt, c/o Messrs. Swan, Hunter & Wigham Richardson, Ltd., Newcastle-on-Tyne ... ... (S) April 1901
Bigge, D. L. Selby, 27, Mosley Street, Newcastle-upon-Tyne ... (E E) Nov. 1894
Billetop, Torben Christian, Springfield, Lesbury Road, Heaton, Newcastle-upon-Tyne ... ... (E) Nov. 1896
Bindesböll, S. C. W., Aktieselskabet Helsingors Jernskibs- og Maskinbyggeri, Helsingor, Denmark ... ... (S) Nov. 1884
Binns, Aubrey B., 42, Lovaine Place, Newcastle-upon-Tyne ... ... (E) { Graduate, Oct. 1894; Member, Dec. 1899
Black Charles, c/o Messrs. Vacuum Oil Co., Ltd., D, Milburn House, Newcastle-upon-Tyne ... ... (E) Oct. 1902
Black, J., 1, Church Street, West Hartlepool ... ... (E) Nov. 1888
Blackett, Jos. S., c/o Lloyd's Register of Shipping, 342, Argyle Street, Glasgow ... ... (E) May 1903
Blackett, Walter, c/o Messrs. Hawthorn, Leslie & Co., St. Peter's Works, Newcastle-upon-Tyne ... (E) { Graduate, Nov. 1886; Member, Nov. 1892
Blackie, Thomas Reid, Lloyd's Register of Shipping, 71, Fenchurch Street, London ... ... (SUR) Nov. 1890
Blake, James, 3, West Park, Woodlands Road, Darlington ... (E) Nov. 1899
Blaylock, Robert, 10, Greenbank Crescent, Darlington ... ... (F M) Dec. 1900
Blenkinsop, John N., Marine Supt. Engineer, Great-Eastern Railway, Parkeston Quay ... ... (E) Oct. 1885
Blow, Charles, Beech Grove, Benton, Newcastle-upon-Tyne ... (E) Nov. 1898

		ELECTED.
Blumer, Wm., Ashbrooke Tower, Sunderland	(S)	Dec. 1886
Böcler, Harry, 19, Azalea Terrace South, Sunderland (S)	Graduate,	Mar. 1898
	Member,	Dec. 1901
Bodin, Lauritz M., 58, John Street, Sunderland	(E & SUR)	Dec. 1889
Bone, W. J., 61, Linskill Terrace, North Shields	(S)	Dec. 1884
Bonnyman, James Smith, 64, Plasturton Avenue, Cardiff... ...	(E)	Nov. 1889
Booth, Edward Spence, Box 5124, Boston, U.S. America ...	(M S & N A)	Oct. 1889
Borrie, Peter, 55, Bonlea Terrace, Thornaby-on-Tees	(E)	Nov. 1900
Borrowman, William Cameron, Wh.Sch., Strathmore, West Hartlepool	(E)	Oct. 1898
Bosi, Giuseppe, No. 19-3, Via Caffaro, Genoa, Italy ...	(E & NA)	Jan. 1894
Bowerbank, Albert W., 52, Victoria Avenue, Whitley Bay, Northumberland	(E)	Graduate, Nov. 1900
		Member, Dec. 1902
Bowmer, Matthew Noel, 95, Algernon Road, Lewisham, London, S.E.	(E)	Graduate, Dec. 1900
		Member, May 1906
Boyd, Arthur, 8, Rectory Terrace, Sunderland	(E SUR)	May 1895
Boyd, Wm., Prestwick Lodge, Ponteland, nr. Newcastle-upon-Tyne	(E)	Nov. 1884
Boyd, William, 25, Woodbine Avenue, Gosforth, Newcastle-upon-Tyne	(E)	Nov. 1904
Boyt, John T., 387, Bourse Buildings, Philadelphia, Pa., U.S.A. ...	(E)	Nov. 1893
Bradney, Walter, Billiter Buildings, Billiter Street, London, E.C.	(E)	Nov. 1905
Bramwell, Balfour, 4, Victoria Crescent, Ravenhill Road, Belfast	(E)	Graduate, Nov. 1886
		Member, Nov. 1887
Brigham, Robert F., 5, Argyle Terrace, South Shields	(E)	Mar. 1897
Broadbent, Frank, 4, Queen Street Place, London, E.C.	(E E)	Nov. 1893
Brockett, Charles, 35, Milton Road, West Hartlepool	(E)	Feb. 1899
Brookfield, J. W., c/o Messrs. Halifax Graving Dock Co., Halifax, Nova Scotia	(N A)	Nov. 1903
Brotherston, James, 23, Nelson Street, Sunderland	(E)	Oct. 1895
Brown, E. Eugene, c/o Messrs. J. H. Holmes & Co., Portland Road, Newcastle-upon-Tyne	(E E)	Feb. 1886
Brown, Geo. Matthew, c/o Messrs. The British Thomson-Houston Co., Rugby	(E)	Graduate, April 1895
		Member, Nov. 1897
Brown, James, c/o Messrs. Scott & Co., Greenock	(E)	Mar. 1891
Brown Joseph, 26, Fern Avenue, Jesmond, Newcastle-upon-Tyne	(E)	May 1904
Brown, Percy J., 2 Cedars Park, Ryhope Road, Sunderland ...	(E)	May 1899
Brown, Robson, 32, Salmon Street, South Shields	(E)	Nov. 1889
Brown, William, c/o Messrs. Siemens Brothers & Co., Woolwich...	(E)	April 1887
Browne, Benjamin C., jun., 8, Lambton Road, Newcastle-upon-Tyne	(E)	Graduate, Oct. 1898
		Member, Dec. 1901
Browne, Sir B. C., Westacres, Benwell, Newcastle-upon-Tyne	(C E)	Jan. 1885
Bryers, Charles, 10, The Avenue, Sunderland	(E)	Nov. 1902
Buchanan, John H., Oswald Chambers, 5, Oswald Street, Glasgow	(SUR)	Oct. 1888
Buckland, H. B., Baltic Chambers, Quayside, Newcastle-upon-Tyne	(E)	Nov. 1885
Buckwell, George William, Board of Trade Surveyor's Offices, Barrow-in-Furness	(SUR)	Oct. 1896
Bull, John Catharinus, Athelstane, Helensburgh	(E)	Oct. 1892
Bulmer, A. E., Spring Garden Engineering Works, Pitt St., Newcastle-upon-Tyne	(E)	Graduate, Nov. 1895
		Member, Nov. 1901
Bulmer, Frederick Charles, 29, Benwell Grove, Benwell, Newcastle-upon-Tyne	(E)	Graduate, May 1894
		Member, Oct. 1895
Bulmer, John George, 34, Brighton Grove, Newcastle-upon-Tyne	(E)	May 1894

ELECTED.

Bulmer, Septimus, 49, Brighton Grove, Newcastle-upon-Tyne ... ... (E) { Graduate, May 1894 / Member, Dec. 1899 }
Burgess, N. H., 3, Warton Terrace, Newcastle-upon-Tyne ... (E) Nov. 1905
Burley, M. F., 14, Croft Terrace, Jarrow-on-Tyne ... ... (F) Nov. 1899
Burnett, Norman, B, Milburn House, Newcastle-upon-Tyne ... (E) Oct. 1891
Bushell, Chas. A., 1, Benton Terrace, Newcastle-upon-Tyne (N A & SUR) Nov. 1893
Butterfield, George, 4, Kayll Road, Sunderland ... ... (S) Nov. 1884
Butterworth, George Herbert, The Stanfield, 134, Liverpool Road, Great Crosby, nr. Liverpool ... ... (E) Nov. 1899

C.

Cadle, Thos. O. M., 11, Saville Row, Newcastle-upon-Tyne ... (E) Nov. 1904
Cairns, C. W., M.Sc., 22, Otterburn Avenue, Gosforth, Newcastle-upon-Tyne ... ... (E) { Graduate, Nov. 1894 / Member, Dec. 1897 }
Carr, Ralph, jun., Thornleigh, Clayton Road, Newcastle-upon-Tyne ... ... (E) { Graduate, Jan. 1894 / Member, Nov. 1901 }
Cama, Nusserwanji Bomanji, Sleater Road, Tardeo, Bombay, British India ... ... (E) Dec. 1888
Cameron, Angus, 27, Rosslyn Terrace, Sunderland ... ... (S) Nov. 1892
Cameron, Hugh Robert, Tweed House, York Terrace, North Shields (E) Feb. 1903
Campbell, Thomas, c/o Messrs. Morday & Carney, Windsor Slipway, Cardiff ... ... (S) Mar. 1894
Carney, J. H., Glengariffe, Stow Park, Newport, Monmouth ... (E) Mar. 1897
Carney, W. H., "Oakdene," Stow Hill, Newport, Monmouthshire (S) Oct. 1902
Carstons, Samuel, Messrs. Burmeister & Wains, Maskin- og Skibsbyggeri, Copenhagen, Denmark... ... ... (S) Dec. 1887
Carter, Geo. J., c/o Messrs. Sir W. G. Armstrong, Whitworth & Co., Elswick Shipyard, Newcastle-upon-Tyne ... ... (N A) Dec. 1897
Ceuvel, John L., 763, Gulgenstug, Naarden, Holland ... ... (E) Mar. 1886
Champness, E. Coulter, Lloyd's Register of Shipping, Collingwood Buildings, Newcastle-upon-Tyne ... ... (SUR) Dec. 1904
Chapman, Harry Reynolds, Messrs. Clarke, Chapman & Co., Gateshead-on-Tyne ... ... (E) Mar. 1893
Chapman, John Abel, c/o Messrs. Clark, Chapman & Co., Victoria Works, Gateshead ... ... (E) Mar. 1906
Charlton, T., 25, Lincoln Street, Gateshead-on-Tyne ... ... (E) Nov. 1884
Chaston, Edward Catmore, 36, St. George's Terrace, Newcastle-upon-Tyne ... ... (E) Oct. 1894
Chicken, Thomas, c/o Messrs. Newport Engineering and Ship Repairing Co., Newport, Monmouth ... ... (E) Oct. 1892
Chilton, Joseph, Laxey House, Polemaise Street, Blaydon-on-Tyne (E) Dec. 1899
Chisholm, Alexander, c/o Messrs. The Sunderland Shipbuilding Co., Sunderland ... ... (S) Mar. 1893
Christie, J. D., 12, Northumberland Terrace, Tynemouth ... (S) Nov. 1884
Christie, Reginald, Woodside, Tynemouth ... ... (E E) Mar. 1900
Clark, George, Southwick Engine Works, Sunderland ... (E) Feb. 1888
Clark, Henry, Southwick Engine Works, Sunderland ... ... (E) Oct. 1887
Clark, John Harwood, Messrs. Sir James Laing & Sons, Deptford Yard, Sunderland ... ... (E) Nov. 1901
Clarke, Harry, Lloyd's Register of Shipping, Bank Chambers, Newport, Monmouth ... ... (E) Mar. 1897

ELECTED.

Clarke, Henry Trevisa, Deptford Shipyard, Deptford, Sunderland (S) Mar. 1892
Cleghorn, Alexander, 14, Hatfield Drive, Kelvinside, Glasgow ... (E) Feb. 1897
Clephane, Alex., 10, Chancelot Terrace, Ferry Road, Edinburgh (M S) Jan. 1905
Cohn, William M., 2, Marine Terrace, North Shields ... ... (S) Nov. 1893
Coleman, Arthur C., Clifton House, Forest Hall, Northumberland (E E) Nov. 1903
Collins, Edward D., 5, Albert Terrace, Whitley Bay, Northumberland ... ... (E) Feb. 1903
Common, John B. A., Lloyd's Register of Shipping, 71, Fenchurch Street, London, E.C. ... ... (E) April 1896
Coninck, Gaston de, Bay Bank, Hampton, Va., U.S.A. ... . .
Conràdi, Carl, Prinsens Gade 2b, Christiania, Norway ... ... (E) Nov. 1884
Cookson, John A., 2, St. Edmund's Road, Gateshead-on-Tyne ... ... (E) { Graduate, Dec. 1895; Member, Nov. 1897
Cookson, William D., Milton House, Albert Drive, Low Fell, Gateshead-on-Tyne ... ... (E) Nov. 1901
Cooper, Shapoojee P., c/o Messrs. The Lakhshmi Cotton Manufacturing Co., Ld., Luxmi Mills, Sholapur, British India ... (E) Apl. 1903
Cornish, H. P., Lloyd's Register of Shipping, 28, Kattendyk, Ouest Quai, Antwerp ... ... E) Oct. 1888
Couche, Henry Drew, 36, Alfred Road, Birkenhead ... ... (S) Oct. 1891
Coull, Alex. B., Baltic Chambers, Newcastle-upon-Tyne ... ... (C E) Jan. 1898
Cowan R., 14, Osborne Avenue, South Shields ... ... (E) Dec. 1896
Cowan, William W., 1, Radbourne Terrace, Gateshead-on-Tyne ... (E D) Nov. 1905
Craggs, Ernest H., Messrs. R. Craggs & Sons, Tees Dockyard, Middlesbrough ... ... (S) Oct. 1888
Craig, Robert, Pageland House, Grange Road, West Hartlepool ... (E) Nov. 1892
Crammond, A., Tyne Dock Entrance, Corstorphine Town, South Shields ... ... (E) Nov. 1903
Crighton, A. T., 18, Leadenhall Street, London, E.C. ... ... (E) Apl. 1903
Crookston, John, 72, Mark Lane, London, S.E. ... ... (E) Mar. 1896
Crouch, Herbert, c/o Messrs. The Thames Ironworks and S. B. Co., Tidal Basin, London, E. ... ... (S) May 1905
Crozier, Thomas W., c/o Messrs. Blyth Shipbuilding Co.. Blyth ... (S) Dec. 1902
Cruddas, W. D., Messrs. Sir W. G. Armstrong, Whitworth & Co., Ltd., Elswick, Newcastle-upon-Tyne ... ... (E) Dec. 1884
Cruickshank, Alexander, H.M. Naval Dockyard, Hongkong, China (SUR) Mar. 1892
Cummins, William, c/o Mr. Hyslop, Hampton House, Grey Street, St. Kilda, Melbourne, Australia ... ... (E) Mar. 1896
Cummins, W. R., Ivanhoe, 15, Western Elms Avenue, Reading, Berkshire ... ... (E) Nov. 1884
Curgenven, L. W., Eng.-Lieut., R.N., H.M.S. "Queen," Mediterranean Squadron ... ... (E) Nov. 1903
Currie, H. B., 48, Jesmond Road, Newcastle-upon-Tyne (C E) { Graduate, Nov. 1897; Member, Oct. 1904

D.

Dalrymple, Alexander, 25, Rutland Avenue, Sefton Park, Liverpool (E) Nov. 1901
Dalrymple, Wm., Myrtle Cottage, nr. Cleadon, Sunderland ... (E) Dec. 1886
Dalrymple, William, Jun., 9, Park Place West, Sunderland ... (E) Dec. 1895
Danielsen, John William, Highfield, Farquhar Road, Birmingham... ... ... (E) { Graduate, Mar. 1899; Member, Mar. 1902

ELECTE .

Darling, W. J., Lloyd's Register of Shipping, Dock Chambers, Barry ... ... (S) April 1887
Darney, John, c/o Messrs. Short Bros., Pallion, Sunderland ... (S) Nov. 1884
Davidson, Alexander, c/o Deubler, 11, Nelson Street, Greenock ... (E) Nov. 1900
Davies, Thomas Henry, 4, Princess Gardens, Waterloo, Blyth ... (S D) Mar. 1906
Deighton, William, Messrs. Deighton's Patent Flue Co., Vulcan Works, Pepper Road, Leeds ... ... (E) Nov. 1897
De Keyser, Felix, 13, Westfield Terrace, Wallsend-on-Tyne ... (C E) Mar. 1906
Denny, Archibald, c/o Messrs. Wm. Denny & Bros., Dumbarton ... (S) Dec. 1891
Denny, Leslie, c/o Messrs. Wm. Denny & Bros., Dumbarton ... (S) Nov. 1899
Denny, Peter, "Crosslet," Dumbartonshire, N.B. ... ... (E & S) Nov. 1899
Denton, Geoffrey Price, 63, Osborne Road, Newcastle-upon-Tyne (S) April 1905
De Rusett, Edwin W., Warden House, Percy Park Road, Tynemouth ... ... (S) Nov. 1890
Detchon, John, Bamborough Terrace, North Shields ... ... (E) Feb. 1899
Dewar, John, The Green, Wallsend-on-Tyne ... ... (E) { Graduate, Nov. 1899; Member, Mar. 1904 }
Dick, F. W., c/o Messrs. Park Gate Iron and Steel Co., Ltd., Park Gate, Rotherham ... ... (I & S M) Oct. 1891
Dickie, James, Falston House, West Park, South Shields ... ... (S) Nov. 1901
Dickie, James, Rooms 13 and 14, 315, California Street, San Francisco, California, U.S.A. ... ... (S) Mar. 1894
Dickie, John P., Falston House, West Park, South Shields ... ... (E) { Graduate, Mar. 1898; Member, May 1900 }
Dickie, Matthew D., 27, Blagdon Avenue, Westoe, South Shields (S) Jan. 1903
Dickinson, F. T., Ashbrook Crescent, Sunderland (E) { Graduate, May 1885; Member, Oct. 1886 }
Dickinson, James C., The Cloisters, Sunderland ... ... (E) Nov. 1884
Dickinson, John, Park House, Sunderland ... ... (E) Nov. 1884
Dickinson, Thomas, 105, High Park Road, Newcastle-upon-Tyne... ... ... (S) { Graduate, Nov. 1901; Member, Feb. 1906 }
Dietze, F. G., Messrs. The Hamburg South American Steam Ship Company, Hamburg ... ... (E) Nov. 1893
Dixon, Harold Raylton, Messrs. Sir Raylton Dixon & Co., Ltd., Shipbuilders, Middlesbrough ... ... (S) May 1902
Dixon, James, c/o Messrs. Ropner & Sons, Shipbuilders, Stockton-on-Tees ... ... (E) Dec. 1893
Dixon, John Rochester, 4, St. Nicholas's Buildings, W., Newcastle-upon-Tyne ... ... (E) { Graduate, Oct. 1887; Member, Feb. 1893 }
Dixon, John Thomas, 15, Hotspur Street, Heaton, Newcastle-upon-Tyne ... ... (E) { Graduate, Dec. 1899; Member, Dec. 1901 }
Dixon, William John, Eng.-Lieut., R.N., H.M.S. "Barfleur," Portsmouth ... ... (E) { Graduate, Mar. 1896; Member, Nov. 1899 }
Dobson, Harry James, c/o Messrs. William Dobson & Co., Newcastle-upon-Tyne ... ... (S) { Graduate, Oct. 1891; Member, Feb. 1898 }
Dobson, Wm. G., The Chesters, Jesmond, Newcastle-upon-Tyne ... ... (S) { Graduate, Feb. 1896; Member, Dec. 1901 }
Dobson, William, Shipbuilder, Walker-on-Tyne ... ... (S) Nov. 1888
Donald, James, 58, General Gordon Terrace, Sunderland ... ... (S) Nov. 1884
Donaldson, Henry B., "Inglemeek," Manor Road, Ashford, Middlesex ... ... (S) { Graduate, Nov. 1897; Member, Dec. 1902 }

ELECTED.

Donkin, George, St. Andrew's Engine Works, Walker Gate, Newcastle-upon-Tyne ... ... (E) Oct. 1892
Donovan, J. W., 2, Park Place, West, Sunderland .. .. (E) April 1885
Douglas, Andrew, 11, Day Street, Newcastle-on-Tyne . ... (E) Nov. 1905
Douglas, John F., c/o Messrs. Day Summers & Co., Northam Ironworks, Southampton ... ... (E) Jan. 1888
Dove, Herbert J., 14, Lyndhurst Avenue, Jesmond, Newcastle-upon-Tyne ... ... (E) Nov. 1896
Downing, Nicholas, Glenbrooke, Victoria Avenue, Norton Road, Stockton-on-Tees ... ... (I F) Oct. 1894
Dowsen, Chas., 21, Croft Terrace, Jarrow-on-Tyne... ... ... (E) Dec. 1885
Dowsen, Charles, jun., 21, Croft Terrace, Jarrow-on-Tyne (S) { Graduate, Feb. 1901; Member, Oct. 1904
Dowsen, Jas. Wm., 21, Croft Terrace, Jarrow-on-Tyne ... ... (E) May 1903
Doxford, Albert Ernest, M.A., 1, Grange Crescent, Sunderland... ... ... (E) { Graduate, Oct. 1890; Member, Nov. 1893
Doxford, Charles D., Pallion Shipyard, Sunderland ... ... (S) Nov. 1884
Doxford, Robt., jun., Silksworth Hall, Sunderland (S) { Graduate, Feb. 1897; Member, Dec. 1901
Doxford, Robert P., Pallion Engine Works, Sunderland ... ... (E) Nov. 1884
Doxford, Sir W. Theodore, M.P., Pallion Shipyard, Sunderland ... (S) Nov. 1884
Dressler, Gustav, c/o Messrs. Blohm & Voss, Shipbuilders, Hamburg (E) Jan. 1900
Duckitt, Jno., Leazes Gate Villa, Newcastle-upon-Tyne ... ... (E) Nov. 1884
Duckitt, John Brentnall, 179, Great Norbury Street, Hyde, Cheshire ... ... (E E) { Graduate, Oct. 1888; Member, April 1895
Duckitt, Talbot, Hawthorndale Cottage, Paton Street, Alloa, N.B. ... ... (E E) { Graduate, Oct. 1891; Member, Oct. 1898
Dugdale, William H., Wear Dock Yard, Sunderland ... (C E, S) Mar. 1894
Duguid, Robert, c/o Messrs. Thomas Wilson & Sons, Naval Architects' Department, Hull ... ... (S) Oct. 1892
Dykes, John, Lloyd's Register of Shipping, 3, Oriental Place, Southampton ... ...(SUR) Oct. 1889

E.

Eason, Thos., 30, Rothwell Road, Gosforth, Newcastle-upon-Tyne (E) April 1899
Easthope, James, Messrs. Lloyds Register of Shipping, Ramsden Square, Barrow-in-Furness ... ... (SUR) Dec. 1903
Edmiston, A. R., Ivy Cottage, Highfield Road, Walton, Liverpool ... ... (E) { Graduate, Jan. 1898; Member, Oct. 1904
Edwards, Robert Wm., Eng. Captain, R.N., H.M.S. "Wildfire," Sheerness ... ... (R N E) Feb. 1902
Elder, Edward, c/o Messrs. Frew, Elder, & Co., 9 Queen Street, Newcastle-upon-Tyne ... ... (S) { Graduate, Nov. 1890; Member, Oct. 1892
Elliott, Andrew, 27, Church Rord, Seaforth, near Liverpool ... (E) May 1903
Elliott, Richard G., 132, Chillingham Road, Heaton, Newcastle-upon-Tyne ... ... (S) May 1905
Elliott, William D., Hessle, Hull ... ... (E) Nov. 1894
Eltringham, Harry, Messrs. J. T. Eltringham & Co., Stone Quay, South Shields ... ... (S) Feb. 1901
English, George W., Ash Lea House, South Hylton, near Sunderland ... ... (M E) Nov. 1905

ELECTED.

Eshelby, William, 13, Brankingham Terrace, Norton Road, Stockton-on-Tees ... ... (E) Feb. 1888
Eyres, Reginald J., 4, Cedars Crescent, Sunderland ... (C E) Feb. 1900

F.

Fairbairn, Archbold, Violet Street, South Hylton, Sunderland ... (E) Mar. 1902
Fairburn, William Armstrong, P.O. Box, 183, Quinay, Mass., U.S.A. (*Life Member*) ... ... (N A) (E) Nov. 1902
Fairweather, C. W., Stotes Hall, Jesmond Dene Road, Newcastle-upon-Tyne ... ... (E) Oct. 1902
Farina, A. J., 63, Quayside, Newcastle-upon-Tyne ... ... (E) Nov. 1884
Farquharson, Geo. James, Claudiusstr 31, Wandsbek Bei, Hamburg (E) April 1899
Fenwick, James, B.Sc., C.E., 19, Bridge Street, Sydney, New South Wales ... ... (E) Oct. 1892
Ferguson, Wm. Deeble, 3, Mount Delphi, Antrim Road, Belfast ... (CE) Feb. 1901
Ferrier, Robert M., M.Sc., University College, Bristol ... ... (E) Nov. 1892
Ferry, S. O., 10, Malvern St., Newcastle-upon-Tyne ... ... (E) Oct. 1902
Fettes, James, c/o Messrs. R. A. Mudie & Sons, Maritime Buildings, East, Dock Street, Dundee ... ... (E) May 1899
Field, Arthur M. C., 44, Cambridge Road, Thornaby-on-Tees ... (E E) Jan. 1898
Figari, Emanuel D., c/o Messrs. Odero & Co., Shipbuilding Yard, Foce, Genoa, Italy ... ... (S) Dec. 1900
Findlay, John Taylor, 6, Earls Dene, Low Fell, Gateshead (S SUR) Mar. 1902
Fish, Thomas Wilson, Lloyd's Register of Shipping, 2 Hare Street, Calcutta, British India ... ...(SUR) May 1892
Fisher-Christensen, J. A. L., Armagh House, Dene View, Wallsend-on-Tyne ... ... (E D) Nov. 1905
Fitzgerald, Arthur F., 39, Horsley Road, South Shields (E) { Graduate, Feb. 1901 / Member, Oct. 1902
Fitzgerald, Durham W., Messrs. J. T. Eltringham & Co.. Stone Quay, South Shields ... . (S) Dec. 1900
Fletcher, Robert, Walker Forge, Walker-on-Tyne ... ...(F M) Dec. 1886
Floyd, Joseph, jun., 18, Telford Street, Bensham, Gateshead (I & S M) Mar. 1903
Foggan, John, 122, Wingrove Avenue, Newcastle-upon-Tyne ... (E S) Oct. 1904
Ford, John McLaren, 70, Mount Pleasant, Barrow-in-Furness ... (S) Nov. 1896
Forster, William James, 41, Queen Alexandra Road, North Shields (NA) Dec. 1903
Fortune, Tom Cameron, 76, Falmouth Road, Heaton, Newcastle-upon-Tyne ... ... (E) { Graduate, Jan. 1902 / Member, April 1905
Foster, Henry, Greenhill House, Griffithstown, near Newport, Mon. (E) April 1885
Foster, Herbert Symes, 41, Mather Street, Newcastle-upon-Tyne (E E) Dec. 1904
Foster, L. P., 113, Park Road, Newcastle-upon-Tyne (E) { Graduate, Nov. 1893 / Member, Oct. 1898
Foster, Martin, Claremont, Norton, Stockton-on-Tees ... ... (F M) Nov. 1900
Fothergill, J. R., 1, Bathgate Terrace, West Hartlepool ... ... (C E) Mar. 1886
Fowler, Jas. Speir, 27, Whitlets Road, Ayr, N.B. ... ... (E) Nov. 1901
Fox, Carter, 32, Lish Avenue, Whitley Bay... ... (E) { Graduate, Feb. 1898 / Member, Dec. 1899
Fox, William, 56, Talbot Road, Old Trafford, Manchester ... (E) April 1895
France, Alfred Brown, Extension Hotel, Middlesbrough ... ... (E) Feb. 1900
Franki, J. P., c/o Messrs. Morts Dry Dock and Engineering Co., Sydney, N.S.W., Australia ... ... (E) Jan. 1886

ELECTED.

Fraser, John Holt, c/o Messrs. A. & R. Brown & Co., 90, Regent Road, Liverpool ... ... (E) { Graduate, Oct. 1895; Member, Jan. 1898 }
Friederichs, Herbert F., West Hartlepool Electricity Works, Burn Road, West Hartlepool ... ... (E E) Mar. 1901
Fuller, Philip S., 229, Cardigan Terrace, Gateshead-on-Tyne ... (E) Nov. 1899
Furness, Stephen Wilson, Messrs. Furness, Withy & Co., West Hartlepool ... ... (S) May 1904

G.

Gaine, Roger L. ... ... (E) { Graduate, Dec. 1887; Member, Oct. 1894 }
Gaisford, Harold, R.N., H.M.S. "Albemarle," Channel Fleet ... (E C)
Gannaway, H. G., Palazzina Faggiani, via Colombara, Cornigliano-Ligure, Italy ... ... (S) Nov 1884
Garmey, John, Prince Line, Ltd., Produce Exchange, New York... (E) Dec. 1898
Garson, Stanley T., 5, Rome Terrace, Borough Road, Middlesbrough ... ... (I M) Nov. 1902
Garthwaite, John R., c/o Messrs. R. Ropner & Sons, Stockton-on-Tees (S) May 1889
Garwood, Harry Tom, Eng. Commander R.N., 50, Park Avenue, Whitley Bay, Northumberland ... ... (R N E) May 1903
Gayner, Robt. H., Jun., West Bank, Sunderland ... (E) { Graduate, Mar. 1886; Member, Oct. 1888 }
Gearing, Ernest George, Rosehurst, Grosvenor Road, Headingley (E) Dec. 1892
Geddes, Christopher, 2A, Drury Lane, Water Street, Liverpool ... (E) Oct. 1888
Giacomuzzi, Virgilio, c/o Messrs. Nicolo Odero fu Alessandro, Sestri-Ponenti, Italy ... ... (N A) Nov. 1899
Gibbs, Alfred P., 83, Goldhurst Terrace, South Hampstead, London ... ... (E) { Graduate, Nov. 1901; Member, Nov. 1905 }
Gibson, H., 162, Roker Avenue, Monkwearmouth, Sunderland ... (S) Nov. 1884
Gibson, J. Hamilton, c/o Messrs. Cammel, Laird & Co., Birkenhead Iron Works, Birkenhead ... ... (E) { Graduate, April 1891; Member, Oct. 1894 }
Glahome, J. W., Bewicke Road, Willington Quay ... (E) { Graduate, Jan. 1899; Member, April 1904 }
Golledge, William, c/o Messrs. Aublet, Harry & Co., 53, Curtain Road, London, E.C. ... ... (E E) { Graduate, Nov. 1891; Member, Nov. 1896 }
Good, Farrant, 19, Plasturton Avenue, Cardiff ... ... (E) Mar. 1896
Gordon, William James, c/o Messrs. Vickers, Sons & Maxim, Naval Construction Works, Barrow-in-Furness ... ... (E) Oct. 1887
Gordon, William Leslie, Invermark, Broughty Ferry, N.B. ... (E) April 1893
Graham, James Thos., 126, Westmorland Road, Newcastle-upon-Tyne ... ... (E) Nov. 1897
Graham, Joseph S., Morro House, Syon Street, Tynemouth ... (S) Feb. 1903
Graham, William, West House, Tynemouth ... ... (S) Oct. 1891
Graham, William, 30, Hill Street, Jarrow-on-Tyne... ... ... (S) April 1893
Graham, William, Rockcliffe, Redbrink Crescent, Barry Island, South Wales ... ... (E) Nov. 1894
Gravell, John, Bureau Veritas Register of Shipping, 155, Fenchurch Street, London, E.C. ... ... (N A SUR) Nov. 1884
Gray, Robert, 24, Alexandra Place, Jesmond, Newcastle-upon-Tyne (E) Nov. 1903
Gray, Tom Leonard, 18, Grainger Street West, Newcastle-upon-Tyne ... ... (E E) Feb. 1906
Green, W. G., Churchill Street, Willington Quay-on-Tyne ... (E) Nov. 1884

ELECTED.

Griffith, Edwin, c/o Messrs. Denny & Co., Engine Works, Dumbarton ... ... (E) Nov. 1897
Grimes, Thomas Benjamin, 39, Vespasian Avenue, South Shields... (E) Mar. 1890
Gulston, A., Clayton Park Lodge, Jesmond, Newcastle-upon-Tyne (E) Dec. 1888
Gunn, Sir John, Chairman, Messrs. Mount Stuart Dry Docks Co., Cardiff (*Life Member*) ... ... June 1896
Guyate, E. G., Eng.-Com., R.N., H.M.S. "Lord Nelson," Jarrow-on-Tyne ... ... (E) Nov. 1903

H.

Hall-Brown, Ebenezer, St. Helens Engine Works, Govan, Glasgow (E) May 1902
Hall, Edward, 68, Grange Road West, Jarrow-on-Tyne ... ... (S) Nov. 1885
Hall, F. M., 8, Wentworth Terrace, South Shields ... ... (CE) Nov. 1903
Hall, John, 28, Malvern Street, Newcastle-upon-Tyne ... ... (E) May 1900
Hall, Thomas, The Hall Engineering Works, 14, Cote Street, Montreal, Canada ... ... (E) Nov. 1899
Hamilton, Andrew, 19, James Street, Liverpool ... ... (CE) April 1901
Hamilton, James, Beech House, Mile End, Stockport (E) { Graduate, Nov. 1897; Member, Dec. 1901 }
Hammar, Hugo G., Superintendent, Göteborgs Nya Verkstadsaktiebolag, Göteborg, Sweden ... ... (S) Nov. 1890
Hammond, Fleetwood C., c/o Messrs. Cowpen Coal Co., Ltd., Cowpen Colliery, Blyth ... ... (E) { Graduate, Nov. 1899; Member, Dec. 1901 }
Haramüshi, M., Jun., Mitsubishi Dockyard and Engine Works, Kobe, Japan ... ... (N A) Nov. 1897
Harbottle, Thomas, 17, The Crescent, Whitley Bay ... ... (E) Jan. 1900
Harkness, Richard, Grange Road, West Hartlepool ... (S SUR) Nov. 1884
Harlow, F., 8, Benton Terrace, Newcastle-upon-Tyne ... ... (E) Nov. 1884
Harman, Bruce, Messrs. The Linde British Refrigerating Co., 35, Queen Victoria Street, London, E.C. ... ... (E) Oct. 1886
Harris, Anthony, 82, Victoria Street, Westminster, London, S.W. (E) Mar. 1892
Harrison, Alfred, c/o Messrs. Richardsons, Westgarth & Co., Scotia Engine Works, Sunderland (*Life Member*) ... (E) Oct. 1889
Harrold, Alexander, 26 Park Road, Newcastle-upon-Tyne ... (E) Nov. 1884
Harrold, F., 14, Hextol Terrace, Hexham ... ... (E) Nov. 1888
Harroway, George Mitchell, 18, West Terrace, North Ormesbey, Middlesbrough ... ... (S) Jan. 1896
Hartley, W. A., c/o Messrs. Charles Cammell & Co., Cyclops Works, Sheffield ... ... (E) Jan. 1898
Harvey, John W. J., 2, Chertsey Road, Redland, Bristol ... ... (E) Feb. 1889
Haswell, Wm. Spence, c/o Messrs. Tangye, Ltd., 3, St. Nicholas Buildings, Newcastle-upon-Tyne ... ... (E) Oct. 1900
Haussman, B., c/o Messrs. The Russian Steam Navigation & Trading Co., Odessa ... ... (E) Feb. 1899
Hay, John, "Wansfell," The Grove, Finchley, London, N. ... (E) Nov. 1901
Hayashida, N., c/o Mitsubishi Dockyard & Engine Works, Nagasaki, Japan ... ... (E) Oct. 1902
Hayhurst, James, 41, Warrington Road, Newcastle-upon-Tyne .. (C E) Nov. 1901
Head, William, Manager, Victoria Shipyard, Goole ... ... (S) Feb. 1901
Headlam, Robert, New Park Terrace, Hartburn Lane, Stockton-on-Tees ... ... (E) Nov. 1886

ELECTED.

Heck, John H., Lloyd's Register of Shipping, Collingwood Buildings, Newcastle-upon-Tyne ... ... (S SUR) Nov. 1885

Heck, John S., 29, Brighton Grove, Newcastle-upon-Tyne (E) { Graduate, Dec. 1899; Member, Nov. 1904

Henderson, Alex., 11, Rua Nova do Almada 1°, Lisbon ... ... (E) April 1893

Henderson, A. M., Bennochy, Elm Grove, West Hartlepool ... (E) Nov. 1890

Henderson, John, c/o Messrs. A. Henderson & Co., Mount Stuart Square, Cardiff ... ... (E) June 1896

Henderson, J. R., 3, Humbledon View, Sunderland ... ...(SUR) Oct. 1902

Henry, William P., Cragside, St. Aidan's Road, South Shields ... (E) April 1897

Henshall, Samuel, c/o Messrs. Sir Raylton Dixon & Co., Cleveland Dockyard, Middlesbrough ... ... (S) { Graduate, May 1885; Member, Jan. 1894

Hepburn, Alfred, c/o Messrs. N.E. Marine Engineering Co., Northumberland Forge, Wallsend-on-Tyne ... ... (F M) Dec. 1890

Hepburn, James M., 17, Grosvenor Place, Newcastle-upon-Tyne ... ... (E) { Graduate, Nov. 1895; Member, Dec. 1901

Heslop, Thomas, 6, Eldon Place, Newcastle-upon-Tyne ... ... (E) Dec. 1900

Hewison, Herbert, 113, Woodbine Avenue, Wallsend-on-Tyne ... (S) Dec. 1900

Higginbotham, George Emerton, c/o Messrs. John H. Holmes & Co., Portland Road, Newcastle-upon-Tyne ... ... (E) Nov. 1900

Higgins, C. F., Maison Spiro, Chareh Kasr-el-Nil, Cairo, Egypt... (E E) Feb. 1898

Hildrey, A. J., 11, Newcastle Road, Sunderland ... ... (S) Nov. 1884

Hinchliffe, Robert, 29, Lish Avenue, Whitley Bay, Northumberland ... ... (S) { Graduate, Nov. 1893; Member, Oct. 1898

Hodge, Rowland F. W., c/o Messrs. The Northumberland Shipbuilding Co., Limited, Northumberland Shipyard, Howdon-on-Tyne ... ... (S) Dec. 1890

Hogarth, G. V., 32, Water Lane, Maryland Point, London, E.C. (S) May 1900

Hogg, Archibald, 72, Welbeck Road, Walker-on-Tyne ... ... (S) Jan. 1897

Hogg, James, 8, Lovaine Terrace, North Shields ... ... (B F) Nov. 1889

Hogg, Thomas 8, Lovaine Terrace, North Shields ... ... (E) Feb. 1903

Hök, Wilhelm, 10, Karlaplan, Stockholm, Sweden ... ... (S) Oct. 1886

Hollis, Henry E., 40 Union Street, Glasgow ... ... (I & S M) Feb. 1858

Holmes, John H., Wellburn, Jesmond Dene Road, Newcastle-upon-Tyne ... ... (E E) Jan. 1888

Holmes, Stephen, 15, Park Road, Jarrow-on-Tyne ... (E) { Graduate, Dec. 1901; Member, Oct. 1905

Houston, John, 7 Thornhill Crescent, Sunderland ... ... (E) Nov. 1894

Howie, Robert, Messrs. Lloyds Register of Shipping, 56, John Street, Sunderland ... . (SS) Oct. 1904

Hughes, Thos. Charles, 8, Oxnam Crescent, Spital Tongues, Newcastle-upon-Tyne ... ... (E) { Graduate, Nov. 1893; Member, Nov. 1897

Humphreys, George, Ashfield, Northumberland Avenue, Forest Hall, Northumberland ... ... (E) Jan. 1902

Hunt, Allen E., 8, Dockwray Square, North Shields ... (SUR) Feb. 1901

Hunter, George B., Messrs. Swan, Hunter & Wigham Richardson, Ltd., Wallsend-on-Tyne ... ... (S) Nov. 1884

Hunter, George Ernest, c/o Messrs. Swan, Hunter & Wigham Richardson, Ltd., Wallsend-on-Tyne ... ... (S) { Graduate, Feb. 1898; Member, Nov. 1899

Hunter, Joseph Gilbert, Lloyds Register of Shipping, P.O. Box No. 671, Newport News, Va., U.S.A. ... ... (SUR) Feb. 1900

Hunter, J. W., 22, Argyle Square, Sunderland ... ... (E) May 1885

ELECTED.

Hunter, Summers, c/o Messrs. N.E. Marine Engineering Co., Northumberland Engine Works, Wallsend-on-Tyne ... ... (E) Nov. 1885
Hutchinson, C. W., 6, Park Parade, Westmoreland Road, Newcastle-on-Tyne ... ... (E) Nov. 1884
Hutchison, J., Board of Trade Offices, North Shields ... ...(SUR) Dec. 1891
Hyslop, Alfred M., c/o Messrs. Boothroyd, Hyslop & Co., Akenside Street, Bootle, Liverpool ... ... (E) Mar. 1900

I.

Inglis, John, c/o Messrs. Hawthorn & Co., Leith ... ... (S) April 1887
Inglis, John, LL.D., Pointhouse Shipyard, Glasgow ... (E & S) Oct. 1886
Ions, Thos. R., 11, Newcastle Street, North Shields ... ... (E) May 1903
Irvin, Matthew B., Jesmond Cottage, Mustapha Pasha Ramleh, Alexandria, Egypt ... ... (E) Oct. 1900
Irwin, J. H., The Gables, Ashbrook Range, Sunderland ... ... (E) Nov. 1884
Ito, Kumezo, Mitsu Bishi Dockyard and Engine Works, Nagasaki, Japan ... ... (E) Dec. 1900

J.

Jack, William C., 12, Beaconsfield Arcade, Hongkong, China ... (E) Nov. 1894
Jackson, William S., Messrs. Gourlay Bros. & Co., Camperdown Shipyard, Dundee... ... ... (S) April 1891
James, M. C., 39, Beverley Terrace, Cullercoats ... ... (S) Nov. 1884
James, Matthew C., 39, Beverley Terrace, Cullercoats, Northumberland ... ... (E E) Mar. 1906
Jarvis, Harry Robert, 12, Burnfoot Terrace, Whitley Bay, Northumberland ... ... (S) Feb. 1901
Jarvis, Horace William, West Dyke, Coatham, Redcar ... ... (E) May 1902
Jenkins, Hammond B., 5, Holmside Place, Heaton, Newcastle-upon-Tyne ... . (E) { Graduate, Oct. 1904; Member, Jan. 1906
Job, Norris H., 32, Swarthmoor Terrace, Thornaby-on-Tees ...(C E) Nov. 1905
Jobling, W. J., 1, Akenside Hill, Newcastle-upon-Tyne ... (E & S O) Nov. 1884
Johnson, Alexander A., Bank Chambers, Sandhill, Newcastle-upon-Tyne ... ... (E) Feb. 1893
Johnson, Johan, 16, Magasinsgatan, Gothenburg, Sweden ... (S) May 1885
Johnson, Joseph, Bentham Buildings, Side, Newcastle-upon-Tyne (E) May 1901
Johnson, T. Allan, Clive Hall, Canton, Cardiff ... ... (S) Nov. 1884
Johnston, J. M'Fetridge, 97, Duncairn Gardens, Belfast, Ireland ... ... (S) { Graduate, Nov. 1903; Member, Oct. 1904
Jones, Arthur P., Lloyd's Register of Shipping, 5, Rue Suffren, Marseilles ... ... (E) April 1903
Jones, George, c/o Messrs. Sir W. Gray & Co., Shipyard, West Hartlepool ... ... (S) Oct. 1888

K.

Kapadia, Framjee Dorabjee, c/o Messrs. The Ahmedabad Manufacturing and Calico-Printing Co., Ltd., Jamalpur Gate, Ahmedabad, British India ... ... (E) Feb. 1903
Keene, H. B., Lloyd's Register of Shipping, Ouest Quai, 28, Katendyk, Antwerp ... ... (E) { Graduate, May 1885; Member, April 1887

ELECTED.

Kemp, Herbert J., 52, Flixton Road, Urmston, Manchester ... (E) Nov. 1904
Kendall, Stonard O., Lloyd's Register of Shipping, Collingwood Buildings, Newcastle-upon-Tyne ... ...(SUR) Mar. 1891
Kennedy, Robert Sinclair, Glengall Ironworks Millwall, London, E. ... ... (E) Dec. 1905
Kennedy, William, 14, Gladstone Street, Hartlepool ... ... (E) April 1900
Kerfoot, James, Messrs. The Antwerp Engineering Co., Rue des Indes, Antwerp ... ... (E) Oct. 1892
Kerr, Robert, Bank Chambers, Mosley Street, Newcastle-upon-Tyne ... ... (E) Oct. 1902
King, John, Surveyor's Office, Board of Trade, Liverpool ... ... (S) { Graduate, Dec. 1890; Member, Oct. 1892 }
Kirby, John Storm, 4, Westoe Terrace, South Shields ... ... (E) Mar. 1899
Kirkaldy, John, 21, Ground Floor, Leadenhall House, 101, Leadenhall Street, London, E.C. ... ... (E) Nov. 1885
Kitching, J. F., 24, Fenchurch Street, London, E.C. ... ... (E) Nov. 1890
Knox, Robert, 14, West Avenue, Gosforth, Newcastle-upon-Tyne (NA) Dec. 1903
Kyle, Norman M. W., Norwood, West Avenue, Gosforth, Newcastle-upon-Tyne ... ... (E) Nov. 1898

L.

Laws, B. C., Messrs. Lloyd's Register of Shipping, Collingwood Buildings, Newcastle-upon-Tyne ... ... (NA) Nov. 1903
Laing, Andrew, c/o Messrs. Wallsend Slipway and Engineering Co., Wallsend-on-Tyne ... ... (E) Oct. 1892
Laing, Hugh, Deptford Shipyard, Sunderland ... ... (N A) April 1897
Lamberti, James ... ... (E) May 1904
Landreth, Cowen, 34, Simonside Terrace, Newcastle-upon-Tyne ... (E) Mar. 1896
Latta, James G., 78, Billiter Buildings, Billiter Street, London, E.C. ... ... (C E) Mar. 1902
Leitch, John S., 114, Heaton Road, Newcastle-upon-Tyne ... ... (S D) { Graduate, Mar. 1903; Member, Jan. 1906 }
Le Rossignol, Alfred Ernest, 27, Great George Street, Westminster, London, S.W. ... ... (E E) Nov. 1902
Leathard, Thomas Surtees, 13, Otto Terrace, Sunderland ... ...(SUR) April 1899
Lees, Charles, "Loanda," Wickwar, Gloucester ... ... (E) Oct. 1902
Lewins, Frank, Rosehill, Willington-on-Tyne ... ... (E) Dec. 1895
Lie, Gotfred, Det Bergenske Dampskibsselskab, Bergen ... ... (E) Jan. 1895
Lindfors, Hugo, Surveyor to Lloyd's Register of Shipping, 16 Alexandersgatan, Helsingfors, Finland ... ... (SUR) May 1889
Lineham, Wilfrid J., Jesmond, 21, Newstead Road, Lee, London, S.E. ... ... (E) Oct. 1890
Lishman, John J., Jun., 3, Whitfield Terrace, Plymouth { Graduate, Dec. 1892; Member, May 1900 }
Little, Frank, 19, Westgate Road, Newcastle-upon-Tyne ... ... (E E) April 1902
Littleboy, Chas. Wm., South Stockton Iron Shipyard, Stockton-on-Tees ... ... (S) Oct. 1887
Littledale, John W. E., 148, Culverley Road, Catford, London, S.E. ... ... (E) May 1896
Livingston, Thos. L., Bowerhope, Hill Street, Jarrow-on-Tyne ... (S) Nov. 1884
Lohmeyer, H. G. C., 53, Crown Street, Newcastle-upon-Tyne ... (E) Nov. 1884

ELECTED.

Long, A. E., 130, Albert Road, Jarrow-on-Tyne ... ... (S) Nov. 1884
Lonnon, W., Eng.-Com., R.N., 93, London Road, Portsmouth ... (E) Nov. 1903
Lopez, Jose, 54, Dene View, Wallsend-on-Tyne ... ... (S D) Jan. 1906
Loveridge, Wm. Henry, 8, Grantully Terrace, West Hartlepool ... (E) Feb. 1901
Lowdon, John, Messrs. The Barry Graving Dock and Engineering Co., Limited, Barry Dock, near Cardiff ... ... (E) Dec. 1891
Lowes, J. Alfred, 35, West Sunniside, Sunderland ... ... (E) Dec. 1903
Luhrs, H., 20, Laburnum Avenue, Wallsend-on-Tyne (E) { Graduate, Nov. 1899; Member. Oct. 1904 }
Lumley, Gascoigne, 4, Claremont Place, Gateshead-on-Tyne ... (E) Nov. 1901
Lund, Pearson, Messrs. Noble & Lund, Northern Machine Tool Works, Felling-on-Tyne ... ... (E) Nov. 1900
Lyon, William J., 10, Lynnewood Place, Maryfield, Dundee, N.B. (E) Nov. 1905

M.

MacColl, Hector, Kirkliston Drive, Bloomfield, Belfast ... ... (E) Dec. 1890
MacColl, Hugo, Wreath Quay Engineering Works, Sunderland (*Life Member*) ... ... (E) Nov. 1896
Macdonald, Charles, 4, St. Nicholas' Buildings, Newcastle-upon-Tyne ... ...(SUR) Feb. 1898
MacDonald, David R., c/o Messrs. Sir W. G. Armstrong, Whitworth & Co., Ltd., Walker Shipyard, Newcastle-upon-Tyne (S) Nov. 1891
Macdonald, John C., c/o Messrs. Workman, Clark & Co., Ltd., Engine Department, Belfast ... ... (E) Nov. 1899
Mace, W., 2, Kew Gardens, Monkseaton, Northumberland ... (E) Jan. 1886
Macdonald, Thomas, 5, York Street, Glasgow ... ... (E) Jan. 1906
Macfarlane, Archibald P., 15, Beacon Street, Low Fell, Gateshead-upon-Tyne ... ... (E) Mar. 1902
MacHaffie, John, 635, Terrace Place, Schenectady, New York, U.S.A. (E) Dec. 1885
Mackay, William, Lloyd's Arsenal, Trieste, Austria ... ... (S) Mar. 1892
Mackley, Edward N., 57, Kenilworth Road, Newcastle-upon-Tyne (E) April 1901
Mackley, J. R., 57, Kenilworth Road, Newcastle-upon-Tyne (E) { Graduate, Dec. 1902; Member, Oct. 1904 }
MacMillan, H. M., B.Sc. ... ... (S) Jan. 1902
Maillard, James, 307, Beaconsfield Street, Newcastle-upon-Tyne (E D) Nov. 1905
Male, Francis John, B.Sc., 9, Abbey Terrace, Gateshead-on-Tyne (E) Nov. 1902
Manaira, Giuseppe, c/o Messrs. The Cantiere Navale di Muggiano, Spezia, Italy ... ... (E & N A) Nov. 1893
Marr, James, c/o Messrs. J. L. Thompson & Sons, North Sands Shipyard, Sunderland ... ... (S) Nov. 1884
Marshall, R. J., 53, Larkspur Terrace, Jesmond, Newcastle-upon-Tyne... ... ... (E) Mar. 1887
Marshall, Robert, Board of Trade Surveyor's Office, West Hartlepool ... ... (SUR) Mar. 1901
Mason, George F., Lloyds' Bank Buildings, Mount Stuart Square, Cardiff ... ... (E) Oct. 1895
Mather, Charles, 60, St. George's Terrace, Newcastle-upon-Tyne (SUR) Oct. 1888
Mather, Thomas Brewer, 13, Park Avenue, Whitley Bay, Northumberland ... ... (C E) Nov. 1898
Matheson, William, c/o Messrs. R. & W. Hawthorn, Leslie & Co., Hebburn-on-Tyne... ... ... (S) Dec. 1889

ELECTED.

Mathieson, Donald, 20, Belle Vue Park, Sunderland ... ... (E) Nov. 1898
Matthews, A., Wandsworth Villa, Coldbath Road, Harrogate ... (S) Nov. 1884
Matthews, Jas., c/o Messrs. R. & W. Hawthorn, Leslie & Co., Forth Banks, Newcastle-upon-Tyne ... ... (E) Oct. 1886
Maughan, Philip A., 11, Forsyth Road, West Jesmond, Newcastle-upon-Tyne ... ... (S) Dec. 1900
Maxwell, Thomas, Millfield House, Newburn, R.S.O. ... ... (E) Nov. 1899
Maxwell, William Ward, B.Sc., Messrs. H. Charlton & Co., Engineers, Gateshead-on-Tyne ... ... (E) Dec. 1896
McBride, William, Hartburn, Cleveland Road, Hartlepool ... (E) Dec. 1894
McClintock, E. E., 4, Elm Terrace, The Green, Wallsend-on-Tyne (E) Nov. 1903
McCoull, Cecil, Ovington House, Ovington-on-Tyne (EE) { Graduate, Oct. 1895; Member, Dec. 1901 }
McCullock, T. M., 13, Heaton Road, Newcastle-upon-Tyne ... (S) Feb. 1905
McFarlane, John T., Craigmore, Cargil Terrace, Trinity, Leith, N.B. ... ... (S) Nov. 1905
McGillivray, Peter, 16, Normanton Terrace, Newcastle-upon-Tyne ... ... (E) Nov. 1899
McGlashan, Arch., Beechcroft, Clifton Avenue, West Hartlepool (S) Nov. 1885
McGregor, Duncan, 31, Argyle Street, Hebburn ... ... (S) Dec. 1899
McIlvenna, J. G., c/o Messrs. The Tyne Pontoons and Dry Docks Co., Wallsend-on-Tyne ... ... (S) Nov. 1884
McKechnie, James, Messrs. Vickers, Sons & Maxim, Naval Construction Works, Barrow-in-Furness ... ... (E) April 1896
McKenna, Francis, c/o Messrs. E. F. Wailes & Co., 4, St. Nicholas' Buildings, Newcastle-upon-Tyne ... (E) { Graduate, Dec. 1890; Member, Dec. 1896 }
McLaren, Robert M., Lloyd's Register of Shipping, 321, The Bourse, Philadelphia, U.S.A. ... ... (S) Nov. 1893
McLaren, William, Pier Head Works, Bridgetown, Barbados, B.W.I. (E) Oct. 1894
McLean, John H. K., Abey House, Plotina Terrace, South Shields (S) Mar. 1897
McLellan, William, Collingwood Buildings, Newcastle-upon-Tyne (CE) Feb. 1903
McNab, Andrew P. W., Lloyd's Register of Shipping, Collingwood Buildings, Newcastle-upon-Tyne ... ... (SUR) May 1903
McNeil, Thomas Young, Ship Drawing Office, Messrs. John Brown & Co., Clydebank, Glasgow ... ... (S) Oct. 1895
Meagher, H. L., 86, Park Road, Newcastle-upon-Tyne ... ... (E) Dec. 1896
Mechan, Henry, Scotstoun Ironworks, Scotstoun, Glasgow ... (E) May 1898
Meikle, A. F. T., 960, Sauchiehall Street, Glasgow ... ... (E) Oct. 1904
Meldrum, Michael, Humbledon View, Sunderland ... ... (E) Dec. 1893
Mellanby, Alex. Lawson, D.Sc., The Technical College, Glasgow ... ... (E) { Graduate, Dec. 1894; Member, Oct. 1896 }
Melville, James, Messrs. The Sammugar Jute Factory Co., Ltd., Sammugar, Calcutta ... ... { Graduate, Feb. 1900; Member, Jan. 1902 }
Merz, Charles H., 28, Victoria Street, Westminster, London, S.W. (CE) Feb. 1903
Metcalf, Thos., 18, John Street, Sunderland ... (S) { Graduate, May 1885; Member, Nov. 1893 }
Metcalfe, C. S., 24, Croft Avenue, Sunderland ... ... (E) Nov. 1884
Meuwissen, J. ... ... (E) Nov. 1899
Micheli, Pietro, Jun., Via Sottoripu, No. 1, piano nobile, Genoa, Italy ... ... (E & N A) Oct. 1888
Middlemass, Thomas, 3, Albert Place, Norton Road, Stockton-on-Tees... ... ... (S) Oct. 1889

ELECTED.

Middleton, H., 20, Lynnwood Avenue, Newcastle-upon-Tyne (I & S M) Jan. 1893
Middleton, R A., 20, The Grove, Benton, near Newcastle-upon-Tyne ... ... (N A) Oct. 1892
Millar, Thos., c/o Messrs. Gourlay Bros. & Co., Engineering Department, Dundee, N.B. ... ... (S) Nov. 1884
Mills, Giles, Messrs. North Lincoln Engineering Co., Grimsby ... (E) Mar. 1906
Milne, Geo. M., 18 Kirton Park Terrace, North Shields (E) { Graduate, Feb. 1898 / Member, Nov. 1903
Milne, James, Messrs. Hawthorn, Leslie & Co., Hebburn-on-Tyne (E) Nov. 1904
Milton, James Edward, Messrs. Lloyd's Register of Shipping, 71, Fenchurch Street, London, E.C. ... ...(SUR) Nov. 1900
Milton, J. T., Lloyd's Register of Shipping, 71, Fenchurch Street, London, E.C. ... ... (E SUR) Nov. 1886
Mitchell, Wm., 61, Nelson Street, Willington Quay-on-Tyne (S) { Graduate. Jan. 1898 / Member, Feb. 1901
Moffatt, William Graham, 44, Lennox Avenue, Scotstoun, Glasgow (E) Mar. 1899
Moffitt, George, c/o Messrs. The Blyth Shipbuilding Co., Blyth ... (S) Oct. 1888
Moncrieff, John M., Consett Chambers, Pilgrim Street, Newcastle-upon-Tyne ... ... (C E) Dec. 1899
Moody, Thomas V., c/o Messrs. Scott Bros., 46, Sandhill, Newcastle-upon-Tyne ... ... (E) Dec. 1887
Morgan, John Osborn, Bank Chambers, Sandhill, Newcastle-upon-Tyne... ... ... (CE) Feb. 1901
Morgan, W. H., 8, Hawthorn Grove, Wallsend-on-Tyne ... ... (E) Nov. 1884
Morison, D. B., Hartlepool Engine Works, Hartlepool ... ... (E) Feb. 1885
Mörk, Peter, 31, Holsteinsgude, Copenhagen ... ... (E) Nov. 1884
Moroney, E. F., 115, Warton Terrace, Heaton, Newcastle-upon-Tyne ... ... (E) { Graduate, Feb. 1892 / Member, Nov. 1899
Morrison, Robt., 73, High Street, Kirkby Stephen, Westmoreland (E) Nov. 1886
Morrison, William, Lloyd's Register of Shipping, Maritime Buildings, Dundee ... ... (E SUR) Oct. 1890
Morton, John, 13, Hillside, Tunstall Road, Sunderland ... ... (E) Nov. 1902
Morton, Richard Fraser, Lloyd's Register of Shipping, Orchard Chambers, Church Street, Sheffield ... ... (E SUR) Oct. 1890
Moss, William, 6, St. Thomas's Terrace, Newcastle-upon-Tyne ... ... (E) { Graduate, Jan. 1898 / Member, Dec. 1901
Mould, Francis H., 32, Trafalgar Terrace, Swansea (E) { Graduate, Feb. 1892 / Member, Jan. 1897
Mountain, William Chas., The Hermitage, Gateshead-on-Tyne (E E) Feb. 1889
Mudd, Percival Arthur, c/o Messrs. P. A. Mudd & Co., Engineers, 55, Church Street, West Hartlepool (E) { Graduate, Oct. 1900 / Member Oct. 1902
Muir, Alfred Edward, Messrs. J. L. Thompson & Sons, North Sands Shipyard, Sunderland ... ... (S) Mar. 1893
Muir, John, 7, Ilford Road, High West Jesmond, Newcastle-upon-Tyne ... ... (S E) May, 1906
Muir, Robert, 11, Clarence Crescent, Whitley Bay, Northumberland ... ...(SUR) Oct. 1886
Muir, Robert Home, 1, Lovaine Crescent, Newcastle-upon-Tyne ... (S) Oct. 1892
Mulherion, G. F., Birtley Avenue, Tynemouth ... ... (S) Nov. 1884
Munck, Ove. Holger, c o Messrs. Burmeister & Wain, Shipbuilders, Copenhagen, Denmark ... ... (S) Feb. 1899

ELECTED.

Murdock, Thomas Plunkett, 2, Larkspur Terrace, Newcastle-upon-Tyne ... ... (E) Jan. 1904
Murray, Athole J., Hussendean, Holywell Avenue, Monkseaton, Northumberland ... ... (S D) Nov. 1905
Murray, Charles W., c/o Messrs. Babcock & Wilcox, Ltd., Oriel House, 30, Farringdon Street, London, E.C. ... ... (E) May 1901
Murray, Councillor W., 36, Simonside Terrace, Newcastle-upon-Tyne ... ... (E) Oct. 1902
Murray, David, 59, Warkworth Avenue, Whitley Bay, Northumberland ... ... (E) Nov. 1903
Murray, George Harper, 37, Bon Accord Street, Aberdeen ... (S D) May, 1906
Murray, William I., Eng. Lieut., R.N., 5, Belgrave Terrace, Newcastle-upon-Tyne .. .. (E) Jan. 1905
Myles, David, c/o Messrs. N.E. Marine Engineering Co., Northumberland Engine Works, Wallsend-on-Tyne ... ... (E) Nov. 1884

N.

Nastoupil, John, Chief Engineer, Austro-Hungarian Navy, Marine Casino, Pola, Austria ... ... (E) Nov. 1890
Neill, William Reid, 5, Azalea Avenue, Sunderland ... ... (E) Dec. 1897
Nelson, George, c/o Messrs. Crosier, Stephens & Co., 2, Collingwood Street, Newcastle-upon-Tyne (E) { Graduate, Jan. 1900; Member, Dec. 1901
Nevins, William, Hazel Rrae, 18, Bradford Road, Shipley, Yorkshire (E) Mar. 1894
Nevison, Thomas C., 18 Milton Road, West Hartlepool ... ... (E) April 1900
Nicholls, H. E., 25, Churchill Street, Sunderland ... ... (E) Nov. 1893
Nichols, Walter W., 19, Telford Street, Gateshead ... ... (E) May 1895
Nicholson, John S., North View, Mowbray Road, Westoe, South Shields ... ... (E) Nov. 1893
Nicholson, P. F., c/o Messrs. R. & W. Hawthorn, Leslie, & Co., Hebburn-on-Tyne ... ... (S) Feb. 1901
Nicol, John M., 15, Linskill Terrace, North Shields ... ... (E) Nov. 1884
Nicolson, G. C., 8, York Terrace, Gillingham, Kent (E) { Graduate, Oct. 1885; Member, Oct. 1888
Nixon, John R., c/o Messrs. Blyth Shipbuilding Co., Ltd., Blyth ... ... (S) { Graduate, Feb. 1898; Member, Oct. 1902
Noble, Harry, Northern Machine Tool Works, Brewery Lane, Felling-on-Tyne .. .. (E) Nov. 1888
Norman, W. S., White House, Whitby, near Chester ... ... (E) Nov. 1884
Norton, Harold P., P.O. Box 458, Stratford, c/o Messrs. P. R. Scott, Fairfield & Co., Connecticut, U.S.A. ... ... (E) Oct. 1890
Noton, F. R., Lloyd's Register of Shipping, 342, Argyle Street, Glasgow ... ... (S) Nov. 1884
Nunes, Enrique E., 4451 Calle Charcas, Buenos Ayres ... ... (E) April 1891
Nylen, Otto, Repslagaregatan, 9[11], Stockholm, Sweden ... ... (E S) Oct. 1904

O.

Ogilvie, William, 19, Woodbine Road, Gosforth, Newcastle-upon-Tyne ... ... (E E) { Graduate, Oct. 1902; Member, Nov. 1905
Olsen, Hans B., jun., Victoria Road, West Hartlepool (E) { Graduate, Feb. 1895; Member, Feb. 1902
O'Neill, J. J., 2, Erith Terrace, Sunderland ... ... (E) Nov. 1884

ELECTED.

Ord, Godfrey C., The Esplanade, Sunderland ... ... (E E) Jan. 1897
Orde, E. L., c/o Messrs. Sir W. G. Armstrong, Whitworth & Co., Ltd., Walker Shipyard, Newcastle-upon-Tyne ... ... (E) Oct. 1887
Orlando, Chev. Giuseppe, Cantiere Navale, Fratelli Orlando, Leghorn ... ... (N A) Jan. 1893
Ormonde, John Grey, 35, Percy Gardens, Tynemouth ... ... (E) Nov. 1897
Oxley, G., 51, Norman Terrace, Howdon-on-Tyne ... ... (S) Nov. 1884
Oxton, Walter, Red House, Wivenhoe Cross, Colchester (E) { Graduate, Dec. 1890 / Member, May 1894

P.

Page, F. J., Eng.-Lieut., R.N., 4, Alexandra Crescent, Newcastle-upon-Tyne ... ... (E) Dec. 1903
Parish, junr. William F., Messrs. Vacuum Oil Co., Ltd., 4, Norfolk Street, Strand, London ... ... (E) Nov. 1905
Parker, James H., 11, Gladstone Street, Hartlepool ... ... (E) April 1900
Parsons, The Hon. Charles A., C.B., M.A., F.R.S., Turbinia Works, Wallsend-on-Tyne ... ... (E E) Dec. 1887
Patterson, Jas., c/o Messrs. Caldwell & Co., Limited, Elliot Street, Glasgow ... ... (E) Nov. 1884
Patterson, Robert O., Thorneyholme House, Blaydon-on-Tyne ... ... (E) { Graduate, Jan. 1895 / Member, Dec, 1901
Pattison, Jos., Bute Docks, Cardiff ... ... (E) Nov. 1884
Paulin, William J., 78, Third Avenue, Heaton, Newcastle-upon-Tyne ... ... (E) April 1897
Paxton, John F., 52, Walker Terrace North, Gateshead ... ... (E) May, 1899
Pease, J. C. S., Board of Trade Offices, Falmouth ... ... (E S) Oct. 1904
Penney, R. H., Board of Trade Offices, 79, Mark Lane, London, E.C. ... ... (S SUR) Nov. 1884
Pepper, W., Sunnyside, Stockton-on-Tees ... ... (E) Nov. 1888
Perrett, Jos. Richard, c/o Messrs. Sir W. G. Armstrong, Whitworth & Co., Ltd., Elswick Shipyard, Newcastle-upon-Tyne ... (N A) Nov. 1896
Pescod, Joseph Hind, 1, Railway Street, Jarrow-on-Tyne (S) { Graduate, Feb. 1898 / Member, Jan. 1900
Petree, James, Lloyd's Register of Shipping, 12, Oriel Chambers, Water Street, Liverpool ... ... (N A SUR) Oct. 1885
Petterson, Carl Edwin, 16, Magasinsgatan, Gothenburg, Sweden (E) Oct. 1891
Phillips, Joseph, 15, Park Avenue, Wallsend-on-Tyne ... ... (S) Dec. 1902
Philipson, Roland, Tynemouth... ... ... (E) Dec. 1884
Phorson, P., Glen Lea, Roker, Sunderland ... ... (S) Nov. 1884
Pierce, Robert Cecil, Creefleet, Cumberland Gate, Kew, Surrey ... ... (E E) { Graduate Dec. 1898 / Member Dec. 1899
Pill, Jos. H., Eng.-Com., R.N., 4, South Parade, Newcastle-upon-Tyne... ... ... (E) Nov. 1903
Pilling, Joseph H., 31, Roker Park Road, Roker, Sunderland ... (E D) Nov. 1905
Pinkney, Edmund W. R., 65, Fern Avenue, Newcastle-upon-Tyne (E) Dec. 1904
Pitt, Frederick William, 552. Chester Road, Old Trafford, Manchester, S.W. ... ... (E SUR) Oct. 1890
Poli, Rodolfo, Chioggia, Italy ... ... (N A) Jan. 1890
Posgate, James S., Messrs. Power and Mining Machinery Co., Cudahy, Milwaukee, Wisconsin, U.S.A. ... (E) { Graduate, Nov. 1895 / Member, Dec. 1901

ELECTED.

Powell, James Richard, Royal Stuart Buildings, Cardiff ... ... (C E) May 1894

Pringle, Alfred, 10, Somerset Terrace, Walker-on-Tyne (S) { Graduate, Dec. 1891 / Member, Jan. 1894

Pringle, James G., 10, Somerset Terrace, Walker-on-Tyne... ... (S) Oct. 1892

Proven, George, 358, Leith Walk, Leith, N.B. ... ... (E) Mar. 1901

Purdon, Andrew S., Messrs. Irvine's Shipbuilding and Dry Docks Co., Limited, West Hartlepool ... ... (S) Oct. 1892

Purvis, Fred. W., c/o Messrs. Sir W. Gray & Co., Central Shipyard, West Hartlepool ... ... (S) April 1893

Putnam, T., Darlington Forge, Darlington ... ... (FM) Nov. 1884

Q.

Quicke, Herbert John, c/o Messrs. Harfield & Co., Blaydon Ironworks, Blaydon-on-Tyne ... ... (E) Feb. 1891

R.

Ramage, J. T., St. Aubyn's, Bonnington, Edinburgh ... ... (E) April 1887

Ramage, John Anderson, 72, Glen Terrace, Hebburn-on-Tyne ... (S) Oct. 1892

Ranken, David, 8, Brookside Terrace, Sunderland ... ... (E) Nov. 1900

Rappaport, Fred. G., The Baku Russian Petroleum Co., Ltd., Balakhani, South Russia ... ... (E) { Graduate, Mar. 1894 / Member, Jan. 1902

Rea, Harry Ernest, 10, Park Avenue, Whitley Bay, Northumberland ... ... (S) Dec. 1904

Readhead, Jas., Westoe Hall, South Shields ... ... (S) Nov. 1884

Readhead, John, Rockcliffe, Westoe, South Shields ... ... (E) Mar. 1886

Readhead, R., South Garth, Westoe Village, South Shields ... (E) Nov. 1884

Readhead, Stanley, Westoe Hall, South Shields ... ... (S) Mar. 1906

Readhead, W. B., Beach View, South Shields .. .. (S) Nov. 1886

Redpath, David, 59, Claremont Road, Seaforth, Liverpool ... (E) Nov. 1901

Reed, J. W., c/o Messrs. Palmer's Shipbuilding and Iron Co., Limited, Engine Works Department, Jarrow-on-Tyne ... (E) Nov. 1884

Reilly, Myles O'Hara, c/o Messrs. Antwerp Shipbuilding Co., Ltd., Hoboken-lez-Anvers, Belgium ... ... (S) Oct. 1902

Rennoldson, C., Messrs. J. P. Rennoldson & Sons, South Shields (S) Jan. 1886

Rennoldson, Jos. M., Fairfield, Westoe, South Shields ... ... (S) Feb. 1886

Renton, James, Engineer's Department, Trinity House, Tower Hill, London, E.C.... ... ... (E) Jan. 1904

Reynolds, Charles H., 155, Fenchurch Street, London, E.C. ... (S) Mar. 1889

Richardson, Jas. Wm., Jesmond, Egerton Park, Rock Ferry, Cheshire ... ... (E & S) Nov. 1903

Richardson, John Lyth, 27, Malborough Avenue, Hull ... ... (E) Nov. 1901

Richardson, Wigham, Hindley Hall, Stocksfield, Northumberland (E & S) Nov. 1884

Riley, J. H., Messrs. Riley Bros., Stockton-on-Tees ... ... (B B) May 1893

Riley, John, Grangefield House, Oxbridge Lane, Stockton-on-Tees (B M) Oct. 1902

Riseley, Harry Lorimer, Western Villa, Wallsend-on-Tyne ... (E) Nov. 1900

Ritson, Maurice, Lloyd's Register of Shipping, Piazza S. Giorgio, 32, Genoa ... ... (E SUR) Nov. 1884

Ritson, S. M., 2, Rectory Terrace, Sunderland ... (E) { Graduate, Nov. 1887 / Member, Nov. 1893

Roberts, W. C., 18, Windsor Road, Forest Gate, Essex ... ... (E) Mar. 1901

ELECTED

Robinson, Alfred E., 8, Summerhill E., Sunderland ... ... (M E) Nov. 1905
Robertson, R. A., Thanai Tea Estate, Dikom P.O., Dibrugarh, Assam, India ... ... (E) { Graduate, Nov. 1903; Member, Oct. 1904 }
Robinson, Charles O., Ingleside, North Shields ... (E) { Graduate, Dec. 1893; Member, Nov. 1899 }
Robinson, Francis, The Vicarage, Willington Quay-on-Tyne ... ... E) { Graduate, Nov. 1897; Member, Jan. 1902 }
Robinson, W., 3, Broxbourne Terrace, Sunderland ... (E) { Graduate, May 1895; Member, April 1888 }
Robson, George, 9, Wellington Terrace, South Shields ... ... (E) Oct. 1889
Robson, George, junr., 9, Wellington Terrace, South Shields ... ... (E) { Graduate, Mar. 1899; Member, May, 1906 }
Robson, George, Fairlawn, Davenport Park, Stockport (E) { Graduate, Nov. 1901; Member, Nov. 1903 }
Robson, John, 25, Lawton Street, Newcastle-upon-Tyne ... ... (E D) Nov. 1905
Robson, John H., London County Council School of Marine Engineering, High Street, Poplar, London, E. ... ... (E) Nov. 1885
Robson, John Hayes, 1, Claremont Terrace, South Shields ... (S) Feb. 1902
Robson, J. M., 9, North Terrace, Newcastle-upon-Tyne ... ... (E) Nov. 1884
Robson, M., 16, Grange Terrace, Sunderland ... ... (S) Nov. 1884
Robson, Nathaniel E., 5, Park Villas, The Green, Wallsend-on-Tyne ... ... (E) { Graduate, Dec. 1894; Member, Nov. 1897 }
Robson, Robert, 5, St. Mary's Place, Newcastle-upon-Tyne (EE) { Graduate, Dec. 1894; Member, Mar. 1901 }
Robson, James Bertram Lock, 9, North Terrace, Newcastle-upon-Tyne ... ... (E) April 1905
Rodgerson, Wm. John, 35, Grahams Road, Falkirk, Stirlingshire (E) Nov. 1901
Roger, Robert, Stockton Iron Foundry, West Row, Stockton-on-Tees ... ... (E) Nov. 1888
Rolf, George, 8, Bentinck Crescent, Newcastle-upon-Tyne ... (E E) May 1892
Rolland, Alexander, Villa Ruzic, Susak, Fiume, Hungary... ... (E) Mar. 1892
Ropner, Robert, Jun., Hartburn, Stockton-on-Tees ... ... (S) Feb. 1886
Rosenthal, James H., The Quarries, South Croyden, Surrey ... (E) Dec. 1896
Ross, Charles, c/o Messrs. Smith's Dock Co., Ltd., High Docks, South Shields ... ... (E) Jan. 1896
Ross, William, 20, Meadow Side, Dundee ... ... (E) May 1893
Rowan, Jas., 231, Elliot Street, Glasgow ... ... (E) Nov. 1886
Rowell, G. W., 22, Armstrong Road, New Benwell, Newcastle-upon-Tyne ... ... (E) Feb. 1885
Rowell, H. B., Cleugh Brae, Jesmond Park East, Newcastle-upon-Tyne (*Life Member*) ... ... (S) Nov. 1884
Rusden, L., 14, Sanderson Road, Jesmond, Newcastle-upon-Tyne (E) Nov. 1884
Russell, F. Herbert, Scotia Engine Works, Sunderland ... ... (E) Oct. 1891
Rutherford, Robert T., 2, Lochaber Street, Roath Park, Cardiff ... (E) Nov. 1899
Ryder, C. L., 59, Mount Stuart Square, Cardiff ... ... (E) Oct. 1886

S.

Sandeman, John Watt, 1, St. Nicholas' Buildings, Newcastle-upon-Tyne... ... ... (E) Oct. 1891
Sanders, H. W., 14, Thorburn Street, Fulwell, Sunderland (S) { Graduate, Nov. 1901; Member, Nov. 1903 }

ELECTED.

Sanderson, J., 18, Beaconsfield Crescent, Low Fell, Gateshead ... (S) Nov. 1884
Sawyer, John, c/o Messrs. Thos. Wilson, Sons, & Co., Hull ... (E) Oct. 1886
Sayer, Henry, Walker Iron Foundry, Walker-on-Tyne ... ... (F M) Feb. 1906
Schofield, Charles, Messrs. The Globe Pneumatic Engineering Co., A, Milburn House, Newcastle-upon-Tyne ... ...
Scope, Robert, Director of Messrs. Clarke, Chapman & Co., Ltd., 48, Bewick Road, Gateshead-on-Tyne ... ... Oct. 1904
Scott, Ernest, Sun Buildings, Collingwood Street, Newcastle-upon-Tyne ... ... (E E) Nov. 1884
Scott, George, 36, Bede Burn Road, Jarrow-on-Tyne (S) { Graduate, Jan. 1900 / Member, May 1901
Scott, James, Selby Lodge, Consett, Co. Durham ... ... (E) Oct. 1892
Scott, Joseph, 49, Leazes Terrace, Newcastle-upon-Tyne (E) { Graduate, Dec. 1891 / Member, Oct. 1898
Scott, Joseph R., E, Milburn House, Newcastle-upon-Tyne ... (E) Oct. 1887
Scott, Walter, 28, Hollybrook Road, Clontarf, Dublin ... ... (NA) Mar. 1897
Scott, William, 18, Worcester Road, Bootle, near Liverpool ... (E) Nov. 1884
Scott, William, "Marsden," Ninian Road, Roath Park, Cardiff ... (E) June 1896
Seabury, Edward, Station Road, Broxbourne, Herts ... ... (E) Mar. 1886
Seaman, C. J., Newton Heath Iron Works, Manchester ... ... (E) Jan. 1889
Seaton, Albert Edward, Lawn Park, Boxmoor, Herts. ... ... (E) Jan. 1891
Sedcole, James, 21, Springbank Terrace, Aberdeen ... ... (E D) Jan. 1906
See, Horace, 1, Broadway, New York City, U.S.A. ... ... (E) May 1896
Sergent, William John, 12, College Avenue, Crosby, near Liverpool ... ... (E) Oct. 1898
Shand, H., 116, Shortridge Terrace, Jesmond, Newcastle-upon-Tyne (E) Nov. 1884
Sharp, A. E., c/o Messrs. The Peninsular and Oriental Steam Navigation Co., 122, Leadenhall Street, London, E.C. ... (E) Nov. 1884
Sharp, Mark, 144, Albert Road, Jarrow-on-Tyne ... ... (E) Dec. 1889
Shaw, Thomas, Messrs. Lloyd's Register of Shipping, Collingwood Buildings, Newcastle-upon-Tyne ... ... (SUR) Nov. 1900
Sheret, William Robert, 8, Rosemount Gardens, Antrim Road, Belfast .. .. (S) Nov. 1903
Short, John Gill, East Side, Tyne Dock, South Shields ... ... (NA) Feb. 1899
Short, Jos., 13, John Street, Sunderland ... ... (S) Nov. 1884
Short, Thomas S., c/o Messrs. Short Brothers, Pallion, Sunderland ... ... (S { Graduate, Oct. 1892 / Member, May 1899
Shute, A. E.. 12, Clyde View, Partick, Glasgow ... ... (E) Dec. 1892
Simpson, James M., Eng.-Lieut., R.N., H.M.S. "Thetis," Chatham (E) Nov. 1901
Sinclair, Charles E., 18, James Street, Liverpool ... ... (C E) Jan. 1902
Sinclair, W. Rendall, 1 Stratford Villas, Heaton, Newcastle-upon-Tyne ... ... (E) { Graduate, Nov. 1901 / Member, Dec. 1903
Singleton, Thomas, 46, Drury Buildings, Water Street, Liverpool (F) Apr. 1903
Sinton, John K., Bentham Buildings, 37, Side, Newcastle-upon-Tyne (E) Nov. 1885
Sisson, Wm., Gloucester ... ... (E & N A) Oct. 1888
Sivewright, G. W., 5, Radcliffe Terrace, Hartlepool ... ... (S) Nov. 1886
Skentelbery, Charles, c/o Messrs. Jacobs, Davies, and Barringer, 95, Milk Street, Boston, U.S.A. ... ... (E) Oct. 1900
Skentelbery, Joseph W., Windsor Gardens, Monkseaton ... ... (E) Dec. 1900
Skentelbery, G. Arthur, 19, Sandringham Terrace, Benton, Newcastle-upon-Tyne ... ... (S) Oct. 1902

ELECTED

Skinner, Leslie, Westoe, South Shields ... ... (S) { Graduate, Dec. 1886 / Member, Oct. 1891 }

Smith, C. E., Cowesby, Clifton Avenue, West Hartlepool ... (E) Nov. 1888

Smith, Chas. R., 17, Claremont Place, Newcastle-upon-Tyne ... (E) Nov. 1903

Smith, E. J., Brandon House, Haughton-le-Skerne, Darlington ... (E) Dec. 1900

Smith, L. Eustace, Roseworth Cottage, Moor Road, Gosforth, Newcastle-upon-Tyne ... ... (E) { Graduate, Oct. 1889 / Member, Oct. 1892 }

Smith, Thomas, Steam Crane Works, Old Foundry, Rodley, near Leeds (E) Oct. 1888

Smith, Thomas Edward, Messrs. John Smith & Sons, Newgate Street, Newcastle-upon-Tyne ... ... (E) April 1885

Smith, Wm., 152, Roker Avenue, Sunderland, M. ... ... (E) Nov. 1884

Smith, Wm. Stawart, West Villa, The Green, Wallsend-on-Tyne ... ... (S) { Graduate, Nov. 1893 / Member, Dec. 1897 }

Snell, John F. C., M.I.C.E., Borough Electrical Engineer, Sunderland Corporation Electricity Department, Central Offices, Sunderland ... ... (E E) Mar. 1902

Soliani, Nabor, Col., Messrs. G. Ansaldo, Armstring & Co., Sestri-Ponente, Italy ... ... (S) Jan. 1885

Spence, W. G., c/o Messrs. Swan, Hunter & Wigham Richardson, Ltd., Neptune Works, Walker-on-Tyne (*Life Member*) ... (E) Nov. 1884

Spencer, J. W., Newburn Steel Works, Newburn-on-Tyne ... (E) Feb. 1885

Squire, Charles E., c/o Messrs. Underground Electric Railway Co. of London, Ltd., Lot's Rd, Chelsea, London, S.W. (E E) { Graduate, Nov. 1893 / Member, Oct. 1898 }

Staig, William Andrew, 296, Condercum Road, Benwell, Newcastle upon-Tyne ... ... (E) Feb. 1897

Stanley, John T., 6, Belmont Gardens, West Hartlepool ... ... (E) Oct. 1898

Stephen, A. E., Linthouse, Govan, Glasgow ... ... (E & S) June 1896

Stephens, H. C. J., 94, Fortress Road, Kentish Town, London, N.W. ... ... (E) { Graduate, Oct. 1890 / Member, Nov. 1897 }

Stephenson, C., 4, Hawthorn Villas, The Green, Wallsend-on-Tyne (S) Nov. 1884

Stevenson, Wm., 1, Mosley Street, Newcastle-upon-Tyne... ... (E) Nov. 1884

Stewart, James, 13, Otterburn Terrace, Jesmond, Newcastle-upon-Tyne... ... ... (E) Oct. 1890

Stirling, Andrew, Jun., 3, Greenvale Terrace, Dumbarton... ... (E) Feb. 1888

Stirling, John F., Gilliat House, North Road, Darlington ... ... (F M) Oct. 1902

Stirzaker. J. C., 16, Grosvenor Place, Newcastle-upon-Tyne ... (E) Nov. 1884

Stoddart, A. Lane, York House, Pelaw-on-Tyne ... .. . (S) Nov. 1898

Stoddart, J. E., Lloyd's Register of Shipping, 71, Fenchurch Street, London, E.C. .. .. (E SUR) Oct. 1888

Stoney, Gerald, c/o Messrs. C. A. Parsons & Co., Turbinia Works, Heaton, Newcastle-upon-Tyne ... ... (E) May 1902

Stuart, John. 135, Heaton Park Road, Newcastle-upon-Tyne (E) { Graduate, Dec. 1895 / Member, Nov. 1901 }

Stupersky, Antony ... ...

Summers, James, 4, Vicarage Terrace, Newtown, Stockton-on-Tees ... ... (E) Mar. 1889

Surtees, R., 12, Windsor Terrace, Whitley Bay ... ... (E) Nov. 1884

Sutherland. Donald, c/o Messrs. Hawthorn & Co., Ltd., Leith, N.B. (E) Jan. 1905

Swan, H. F., C.B., Col., Prudhoe Hall, Prudhoe-on-Tyne (*Life Member*) ... ... (S) Nov. 1884

Swinburne, M. W. The Cottage, Jesmond Park, Benton Road, Newcastle-upon-Tyne ... ... (E) Nov. 1884

ELECTED.

Swinburne, T. M., 18, Bewick Road, Gateshead-on-Tyne ... ... (E) Jan. 1885
Swinney, W., 10, Wentworth Terrace, Westoe Lane, South Shields (E) Dec. 1888
Syme, James, Fairfield Works, Govan, Glasgow ... ... (E) Oct. 1892

T.

Tait, Peter W., 41, Dudley Gardens, Leith, N.B. ... ... (MS) Jan. 1905
Tait, Robert, 44, Brisbane Street, Greenock, N.B. ... ... (S D) Mar. 1906
Tanaka, T., c/o Mitsui-Bussan, Kaisha, Kuchinotzu, Hizen-no-Kuni, Japan ... ... (E) Oct. 1904
Tate, Chas. H., 7, Side, Newcastle-upon-Tyne ... ... (N A) Nov. 1884
Taylor, J. T. Lloyd, Dock Engineer's Office, Middleton Road, West Hartlepool ... ... (CE) { Graduate, Oct. 1900; Member, May 1903
Taylor, John, 1, St. Alban's Place, Tynemouth ... ... (E) Dec. 1894
Taylor, Martin B., 3, Park Villas, The Green, Wallsend-on-Tyne ... (S) Jan. 1903
Taylor, Sydney T., 22, Cardigan Terrace, Heaton, Newcastle-upon-Tyne ... ... (SD) Nov. 1905
Teesdale, John, 74, Rothbury Terrace, Heaton, Newcastle-upon-Tyne... ... ... (E) Mar. 1898
Terry, F. Herbert, Messrs. Tyne Brass and Copper Tube Manufacturing Co., Jarrow-on-Tyne ... ... (M) Feb. 1901
Thackrah, John, 8, Mentone Place, Little Woodhouse Street, Leeds (E) Nov. 1901
Thew, Charlton, 80, Osborne Road, Newcastle-on-Tyne (E) { Graduate, Dec. 1899; Member, Nov. 1902
Thomas, Benjamin, 8, Balmoral Terrace, Heaton, Newcastle-upon-Tyne ... ... (E) Feb. 1899
Thomas, Harold, 43, University Street, Belfast ... ... (S) Apr. 1903
Thomas, William, 41, Glenmore Road, Hampstead, London, N.W. ... ... (E) { Graduate, Oct. 1895; Member, Nov. 1899
Thompson, C. E., The Poplars, Sunderland ... ... (S) Nov. 1884
Thompson, Harold, c/o Messrs. George Clark, Ltd., Southwick Engine Works, Sunderland ... ... (E) Nov. 1905
Thompson, Jas., Farringford, Roker, Sunderland ... ... (E) Dec. 1886
Thompson, Joseph Andrew, North Sands Shipyard, Sunderland ... (S) Nov. 1901
Thompson, Robert, North Sands Shipyard, Sunderland ... ... (M S) Nov. 1884
Thomson, James, M.A., 22, Wentworth Place, Newcastle-upon-Tyne... ... . (E & N A) Nov. 1890
Thorn, W. H., 5, Waterville Terrace, North Shields ... ... (E) Nov. 1884
Thornton, James M., 9, Queen's Square, Bristol ... ... (E) April 1893
Thyne, John Sinclair, 32, Azalea Terrace N., Sunderland ... ... (S) Dec. 1899
Tierney, John W., c/o Messrs. The Globe Pneumatic Engineering Co., Ltd., 150, Queen Victoria Street, London, E.C. ... . (E) Nov. 1905
Tinn, Fred. D., North View, Mowbray Road, South Shields ... (S) Nov. 1891
Tinn, George, 245, Cardigan Terrace, Gateshead-on-Tyne ... ... (E) Dec. 1897
Tocher, J. W., c/o Messrs. Wallsend Slipway and Engineering Co., Wallsend-on-Tyne ... ... (S) Mar. 1898
Todd, George William, 53, Victoria Road, Hebburn-on-Tyne (S) { Graduate, Jan. 1898; Member, Dec. 1899
Todd, John P., 21, Stephen Street, Edge Lane, Stretford, near Manchester ... ... (E) Dec. 1897
Todd, William Surtees, Coronation Buildings, Quayside, Newcastle-upon-Tyne ... ... (N A) Nov. 1901

ELECTED

Toomer, C. R., Ravensworth, Westoe, South Shields ... ... (E) Jan. 1899
Toovey, Alfred F., 28, Burdon Terrace, Newcastle-upon-Tyne ... (E) Dec. 1894
Tose, Thomas, Ravenhill, Grange Road, West Hartlepool ... (E) Mar. 1901
Towers, Edward, Jun., 7 Collingwood Street, Newcastle-upon-Tyne ... ... (E) { Graduate, Nov. 1886; Member, Oct. 1888 }
Trail, John, 21, Grosvenor Place, Jesmond, Newcastle-upon-Tyne ... ... (M S) Oct. 1892
Traill, Robert, 6, Windsor Crescent, Whitley Bay, Northumberland (E) Oct. 1896
Trewent, F. J., 43, Billiter Buildings, Billiter Street, London, E.C. ... ... (S) Dec. 1884
Tsimenis, Andreas, 12, Roxburgh Place, Heaton, Newcastle-upon-Tyne ... ... (N A) { Graduate, Oct. 1900; Member, Jan. 1902 }
Tulip, Wilfred, Messrs. Hong Kong and Whampoa Dock Co., Hong Kong, China ... ... (E) { Graduate, Mar. 1902; Member, April 1905 }
Turnbull, John, 194, Chillingham Road, Heaton, Newcastle-upon-Tyne... ... ... (E) Nov. 1898
Turner S. J., 71, Warwick Street, Heaton, Newcastle-upon-Tyne (E) Mar. 1887
Tuxen, Holger, Bureau Veritas Register of Shipping, Heibersgade, 14, Copenhagen, K. ... ... (S) Nov. 1896
Twaddell, James L., Green Bank, Jarrow-on-Tyne... ... ... (S) Oct. 1891
Tweedy, G. F., 1, Grosvenor Villas, Jesmond, Newcastle-upon-Tyne (E) May 1899
Tweedy, John, Kelso House, Fernwood Road, Jesmond, Newcastle-upon-Tyne ... ... (E) Nov. 1884

U.

Ulm, John, The Arsenal, Pola, Austria ... ... (E) Nov. 1885
Urquhart, Douglas M., c/o Messrs. Menzies & Co., Ltd., Old Dock, Leith, N.B. ... ... (S) May 1899

V.

Vardy, George, c/o Messrs. Swan, Hunter & Wigham Richardson, Ltd., Wallsend Shipyard, Wallsend-on-Tyne (E) { Graduate, Oct. 1894; Member, 1898 }
Varty, Bartholomew Snowball, c/o Laurie, 14, Great George Street, Hillhead, Glasgow ... ... (S) { Graduate Oct. 1895; Member May 1901 }
Vianson, N. E., Via, Corsica 20/5, Genoa, Italy ... ... (E) Dec. 1885
Vick, R. W., Messrs. Furness, Withy & Co., Middleton Shipyard, West Hartlepool ... ... (S) Nov. 1888
Vowell, Josias, Elm Lodge, Reading ... ... (E) Feb. 1901

W.

Wadagaki, Y., Imperial Naval Dockyard, Sasebo, Japan ... ... (E) Jan. 1891
Waddingham, William H., c/o Messrs. North Eastern Marine Engineering Co., Ltd., South Dock, Sunderland (E) { Graduate, Nov. 1897; Member, Dec. 1902 }
Wailes, William C., 23, Richmond Road, Cardiff ... (E) { Graduate, Nov. 1898; Member, Nov. 1901 }
Wait, Thomas Herbert, St. Nicholas' Chambers, Newcastle-upon-Tyne ... ... (C E) Dec. 1893
Walker, Archibald, 143, Leith Walk, Leith, N.B. ... ... (E) April 1887
Walker, Henry, 9, Gladstone Terrace, Gateshead-on-Tyne ... (E E) Feb. 1893

ELECTED.

Walker, James, c/o Messrs. River Tyne Commissioners' Office, Bewick Street, Newcastle-upon-Tyne ... ... (C E) Nov. 1898
Walker, John, Wildland, Cottenham Park, London, S.W. (E & S) Nov. 1891
Wallace, John, 11, Havelock Street, Newcastle-upon-Tyne ... (E) Nov. 1903
Waller, Thomas Naunton, Rushmere, Wylam-on-Tyne ... ... (E) May 1898
Wallis, Robert, Wh.Sc., Point Pleasant House, Wallsend-on-Tyne (E) April 1891
Walter, Max, Norddeutscher Lloyd, Central Bureau, Bremen ... (S) Feb. 1893
Walton, J. G., 26, Fenchurch Street, London, E.C. ... ... (E) Nov. 1884
Walton, Samuel, 5, Tyne View Terrace, South Shields ... ... (E) Dec. 1893
Warburton, J., Greenlands, Cleadon, near Sunderland ... ... (S) Nov. 1884
Warburton, John Arthur, 43, General Graham Street, Sunderland ... ... (E) { Graduate, Mar. 1894; Member, Nov. 1896
Ward, Herbert John, The Mill House, Farningham, Kent ... (SUR) Nov. 1898
Ward, John, c/o Messrs. W. Denny & Bros., Dumbarton ... ... (S) Dec. 1891
Wardale, Henry, 9, Woodhouse Terrace, Gateshead-on-Tyne ... (E) Feb. 1888
Watson, Kenneth, 3, Rosella Place, North Shields... (E) { Graduate, Mar. 1899; Member, Oct. 1904
Watson, Thomas Henry, 112, Sidney Grove, Newcastle-upon-Tyne (SUR) Jan. 1896
Watt, Alex. Jas., 10, Sussex Street, Jarrow-on-Tyne ... ... (E) Nov. 1903
Watts, Col. Sir Philip, K.C.B., F.R.S., LL.D., The Admiralty, London ... ... (S) Nov. 1885
Wawn, Tom Noel, c/o Messrs. Wawn & Sons, 45, Sunniside West, Sunderland... ... ... (SUR) Jan. 1900
Webb, William H., 21i, Farndale Road, Newcastle-upon-Tyne ... (E D) Nov. 1905
Webster, William Milne, Thornville, Lesbury Road, Heaton, Newcastle-upon-Tyne .. .. (S) Nov. 1900
Weidemann, Nils, Det-Norske Veritas, Christiania, Norway ...(SUR) Jan. 1892
Weighton, R. L., M.A., 2, Park Villas, Gosforth, Newcastle-upon-Tyne ... ... (E) Nov. 1884
Weir, George Dobie, Sunderland Engine Works, South Docks, Sunderland ... ... (E) Oct. 1894
Weir, John, 46, Lawrence Street, Partick, Glasgow ... ... (E) Nov. 1884
Welton, J. G., 138, Cleveland Road, Sunderland ... ... (E) Nov. 1893
West, Henry H., British and Foreign Chambers, 5, Castle Street, Liverpool ... ... (E & N A) Oct. 1886
Westgarth, Tom, Messrs. Richardsons, Westgarth & Co., Middlesbrough ... ... (E) Oct. 1886
Westmacott, Alfred, Clairvaux, Nettlestone, Isle of Wight ... ... (E) { Graduate, Dec. 1885; Member, Nov. 1892
Westmacott, P. G. B., Rose Mount, Sunninghill, Berks ... ... (E) Nov. 1884
White, A. F., c/o Messrs. Nippon Yusen Kaisha, 2, Fenchurch Avenue, London, E.C. ... ... (E) Feb. 1901
White, Ernest Saxton, B.Sc., Shirley, Jesmond, Newcastle-upon-Tyne ... ... (S D) Nov. 1905
White, R. Saxton, Messrs. Sir W. G. Armstrong, Whitworth & Co., Ltd., Walker Shipyard, Walker-on-Tyne ... ... (S) Nov. 1884
Whyte, James Anderson, 196, Watt Street, Glasgow ... ... (E) May 1902
Widdas, T. D., 56, Plasturton Avenue, Cardiff ... ... (SUR) April 1885
Widdowfield, John H., 3, Beaconsfield Terrace, Gateshead-on-Tyne ... ... (E) Nov. 1901
Wight, Henry D., 1, Park Terrace, Roker, Sunderland ... ... (E E) Dec. 1898
Wildridge, Richard, 90, Berry Street N, Sydney, N.S.W. ... ... (E) { Graduate, Oct. 1895; Member, Oct. 1898

ELECTED.

Wilkinson, Thomas, 9, Laburnum Avenue, Wallsend-on-Tyne ... (S) Nov. 1899
Willcox, F. A., B.Sc., 18, Holinlands, Park, Sunderland ... ... (C E) Nov. 1903
Willcox, Henry Walker, 14, Norfolk Street, Sunderland ... ...(C E) Nov. 1897
Willcox, Percy F. C., 14, Norfolk Street, Sunderland ... ...(C E) Nov. 1897
Willcox, R. J. N., c/o Messrs. Fleming & Ferguson, Ltd., Shipbuilders and Engineers, Paisley ... (E) { Graduate, Mar. 1892; Member, Dec. 1897 }
Williams, Thomas, Messrs. South Durham Steel & Iron Co., West Hartlepool ... ... (I & S M) Dec. 1900
Williams, Thomas R., "Holmside," Bede Burn Road, Jarrow-on-Tyne ... ... (S) Oct. 1895
Williamson, Gordon, 59, Dudley Crescent, Leith, N.B. ... (E SUR) May 1905
Wilson, Alfred Allan, 32, Ferncroft Avenue, Hampstead, London, N.W. ... ... (S) { Graduate, Nov. 1904; Member, May 1906 }
Wilson, Edmund, 8, Clifton Terrace, Forest Hall, near Newcastle-upon-Tyne ... ... (E) Nov. 1901
Wilson, Henry J. H., "Lancefield," Kellfield Avenue, Low Fell, Gateshead-on-Tyne ... ... (E) Nov. 1895
Wilson, Henry Maxson, 15, Lily Avenue, Jesmond, Newcastle-upon-Tyne ... ... (E) May 1902
Wilson, John Reginald, The Willows, Gosforth, Newcastle-upon-Tyne ... ... (E E) { Graduate, Mar. 1894; Member, Dec. 1899 }
Wimble, Arthur, 10, Ventnor Gardens, Monkseaton ... ... (E) Dec. 1893
Winstanley, P. D., Bureau Veritas Register of Shipping, 155, Fenchurch Street, London ... ... (S) Nov. 1884
Withy, H., Middleton Shipyard, West Hartlepool ... ... (S) Nov. 1884
Wood, Henry Alfred, Oakland, North Ormesby, Middlesbrough-on-Tees ... ... (S) Dec. 1893
Wood, Lionel, 4, Simonside Terrace, Heaton, Newcastle-upon-Tyne ... ... (E E) { Graduate, Nov. 1897; Member, Jan. 1903 }
Wood, William, Ruthven, Adderstone Crescent, Jesmond, Newcastle-upon-Tyne ... ... (S) Nov. 1897
Woodeson, Wm. A., 14, Bewick Road, Gateshead-on-Tyne ... (E) Nov. 1901
Wortley, Henry B., Kent House, Egerton Park, Rock Ferry, Birkenhead... ... ... (S) { Graduate, Jan. 1886; Member, Nov. 1892 }
Wray, Thomas W., Board of Trade Offices, Sunderland ... ...(SUR) Jan. 1895
Wright, George H., 33, Albury Park Road, Tynemouth (EE) { Graduate, Feb. 1896; Member, Dec. 1901 }
Wright, Joseph, jun., 7, St. Mary's Place, Newcastle-upon-Tyne... (F M) Feb. 1906
Wright, R., 5, Hawthorn Terrace, Newcastle-upon-Tyne ... ... (E) Nov. 1884
Wurl, Max, 44, Lovaine Place, Newcastle-upon-Tyne ... .. (E) Nov. 1903
Wynd, William Adam, 8, Dilston Terrace, Gosforth, Newcastle-upon-Tyne ... ... (N A) Feb. 1902

Y.

Young, Andrew, Bureau Veritas Register of Shipping, 155, Fenchurch Street, London, E.C. ... ... (S) { Graduate, Feb. 1892; Member, May 1893 }
Young, J. Denholm, 6, Commercial Court, 17, Water Street, Liverpool ... ... (E) Oct. 1888
Younger, R. Elmire House, Heaton, Newcastle-upon-Tyne ... (E) Nov. 1884

Z.

Zeeman, J. H., 147, Bankastraat den Haag ... ... (S) Oct. 1889

ASSOCIATES.

A.

		ELECTED.
Allan, Alex. Selkirk, 16, Denwick Terrace, Tynemouth	(M)	Dec. 1903
Anderson, Daniel G., c/o Messrs. W. Angus & Co., Grainger Street West, Newcastle-upon-Tyne	(A)	Nov. 1893
Armstrong, S., Victoria Road, West Hartlepool	(A)	Nov. 1888

B.

Barklam, George, Braemar, Dudley Port, Staffordshire	(A)	April 1888
Barnes, Henry, Highcliffe, Roker, Sunderland	(A)	Nov. 1901
Barrie, C. C., 49, Meadowside, Dundee	(S O)	Oct. 1904
Barwick, J. S., Ashbrook Grange, Sunderland	(S O)	Nov. 1884
Beynon, Thomas, Hamburg Chambers, Quayside, Newcastle-upon-Tyne	(E A)	Oct. 1891
Bigge, C. W., Northern Counties Club, Newcastle-upon-Tyne ...	(A)	Dec. 1889
Bingham, Sir J. E., Bart., West Lea, Ranmoor, Sheffield	(M)	Mar. 1895
Bird, William, 22, Percy Gardens, Tynemouth	(A)	May 1896
Borrie, Walter, Messrs. Blair & Co., Ltd., Stockton-on-Tees ...	(A)	Jan. 1899
Bowmer, John J., 8, Tankerville Terrace, Newcastle-upon-Tyne...	(S O)	Nov. 1901
Brims, D. N., 5, St. Nicholas' Buildings, Newcastle-upon-Tyne ...	(C)	Nov. 1893
Brown, Charles Ernest, 1, Ashleigh Villas, East Boldon, near Sunderland	(A)	Oct. 1900
Brown, Percy Ledger, 66, Saville Street, North Shields	(E A)	Oct. 1896
Brunton, John, 3, Prior's Terrace, Tynemouth	(S O)	Oct. 1886
Bullen, Tempest C., c/o Messrs. H. E. Moss & Co., K, Exchange Buildings, Newcastle-upon-Tyne	(S O)	Nov. 1891

C.

Carr, Ralph, Thornleigh, Clayton Road, Newcastle-upon-Tyne	(A & S O)	Nov. 1886
Cohan, Edward Asher, c/o Messrs. H. E. Moss & Co., Chapel Street, Liverpool	(S O)	Nov. 1889
Cory, John, Mount Stuart House Cardiff	(S O)	June 1896
Coull, John, Baltic Chambers, Quayside, Newcastle-upon-Tyne ...	(S O)	Oct. 1886
Crawford, Thomas, 10, Haldane Terrace, West Jesmond, Newcastle-upon-Tyne	(A)	Oct. 1896
Crosier, Edward James, East Boldon, via Newcastle-upon-Tyne ...	(A)	Oct. 1889
Culliford, J. H. W., 45, West Sunniside, Sunderland	(S O)	Nov. 1884

D.

Darling, Henry, Secretary, Messrs. Smith's Dock Co., Ltd., High Docks, South Shields		Nov. 1904
Dingle, Charles, 54, Leazes Terrace, Newcastle-upon-Tyne ...	(M S)	Nov. 1905
Dixon, Thomas, c/o Messrs. Sir Raylton Dixon & Co., Ltd., Shipbuilders, Middlesbrough	(A)	May 1902
Dodds, E. F., 36, Side, Newcastle-upon-Tyne	(A)	Nov. 1893
Dodds, John B., 36, Side, Newcastle-upon-Tyne	(CHEM)	Oct 1888
Donkin, Geo., Jun., 50, Grove Street, Newcastle-upon-Tyne ...	(A)	April 1897

ELECTED.

Douglas, John, c/o Messrs. Walker & Hall, 60, Grey Street, Newcastle-upon-Tyne ... ... (A) Oct. 1898
Dove, Edward John, 5, St. Nicholas' Buildings, Newcastle-upon-Tyne ... ... (M) Oct. 1890

E.

Eccles, Edward, B, Milburn House, Newcastle-upon-Tyne (*Life Associate*) ... ... (S O) Oct. 1887
Evans, T. L., Capt., 47, Salisbury Road, Redland, Bristol ... ... (S S) Jan. 1904

F.

Fellows, Alfred, Bergholt House, Park Road, Jarrow-on-Tyne (I & S M) Nov. 1901
Furness, Sir Christopher, Baltic Chambers, West Hartlepool . (S O) Oct. 1888

G.

Gaunt, Richard, The Laurels, New Park Road, Stockton-on-Tees (A) Oct. 1902
Geary, William, 6, Chaloner Terrace W., South Shields ... ...(M S) May 1899
Gore, Thomas Hoskins, 52, Queen's Square, Bristol ... ... (S O) April 1902
Graham, Frank, Sun Buildings, Collingwood Street, Newcastle-upon-Tyne ... ...(E A) Nov. 1891

H.

Hardy, John, Jun., Victoria Road, West Hartlepool ... ... (I M) Nov. 1893
Harris, John T., c/o Messrs. Irvine's Shipbuilding Co., Ltd., West Hartlepool ... ... (A) Mar. 1902
Harrison, Samuel Turner, The Green, Wallsend ... ... (A) Nov. 1897
Harrison, Thomas, 173, High Street East, Sunderland ... ... (A) Dec. 1894
Hedley, John H., Elms West, Sunderland ... ... (S) Dec. 1886
Hedley, Robert, 32, Rectory Terrace, Gosforth, Newcastle-upon-Tyne (A) Nov. 1899
Henzell, Chas. Wright, B, Milburn House, Newcastle-upon-Tyne ... ... (A) Nov. 1901
Henzell, Robert, Northern Oil Works, Newcastle-upon-Tyne (*Life Associate*) ... ... (M) Nov. 1893
Heslop, Richard O., M.A., Akenside Hill, Newcastle-upon-Tyne (I & S M) Oct. 1885
Hinchliffe, John, Stoneleigh, Monkseaton, Northumberland ... (A) Nov. 1899
Hodges, Thomas Wm., 86, Osborne Road, Newcastle-upon-Tyne ... ... (A) Nov. 1899
Hogg, John Thomas, Tyneside Brass Works, Barry Docks, South Wales ... ... (I & S M) April 1896
Hollis, John, c/o Messrs. John Brown & Co., Ltd., 144, St. Vincent Street, Glasgow ... ...(S M) May 1901
Holzapfel, Max, D, Milburn House, Newcastle-upon-Tyne ... (M) May 1900
Hudson, Ralph M., Jun., Tavistock House, Borough Road, Sunderland... ... ... (S O) Dec. 1886
Hunting, Charles S., B, Milburn House, Newcastle-upon-Tyne ... (S O) April 1886

I.

Innes, Charles H., M.A., Rutherford College, Newcastle-upon-Tyne (E) Oct. 1891

J.

		ELECTED
Jennings, Albert Edward, 4, The Crescent, Gateshead-on-Tyne ...	(M)	Nov. 1901
Jobson, W. J., 10, Holly Avenue, Jesmond, Newcastle-upon-Tyne	(A)	May 1889
Jordan, John George, 6, Cedars Crescent, Ryhope Road, Sunderland	(A)	Nov. 1892

L.

Levin, Otto, c/o Messrs. Holzapfel's Compositions Co., D, Milburn House, Newcastle-upon-Tyne	(A)	Nov. 1902
Lodwidge, Philip, Baltic Chambers, Sunderland	(A)	June 1896
Lord, W. R., 41, Queen's Road, Jesmond, Newcastle-upon-Tyne ...	(M M)	Feb. 1900
Lucock, George, 45, Lansdowne Terrace, Horsley Hill Road, South Shields	(M)	Oct. 1900

M.

Macarthy, George E., 54, Pilgrim Street, Newcastle-upon-Tyne ...	(S O)	Oct. 1887
Maughan, William, 13, Mosley Street, Newcastle-upon-Tyne ...	(A)	Feb. 1887
McBeath, Harry C., 87, Jesmond Road, Newcastle-upon-Tyne ...	(A)	Dec. 1900
Meek, John George, 13, Belle Vue Park, Sunderland	(A)	Dec. 1894
Milburn, Sir J. D., Bart., C, Milburn House, Newcastle-upon-Tyne	(S O)	Nov. 1884
Miller, T. R., 9, Great St. Helen's, London, E.C.	(A & S O)	Nov. 1884
Moss, J. Frank. Jr., 24, Riverdale Road, Sheffield	(S M)	Nov. 1901
Muller, J. C. F., 79, Rue Harringrode, Antwerp	(SUR)	Feb. 1890
Murray, Henry H., Hastings Lodge, Hartlepool	(A)	Dec. 1901
Murray, Matthew, The Green, Wallsend-on-Tyne	(A)	Nov. 1893

N.

Naismith, John, Neptune Works, Newcastle-upon-Tyne	(A)	Nov. 1901
Nielsen, Hans Christian, 12, Cliff Terrace, Hartlepool	(S O)	Feb. 1898

O.

Olsen, Hans Benedick, 70, Church Street, West Hartlepool ...	(S O)	Mar. 1893

P.

Park, Robert, Lauriston, Blackhill, Co. Durham	(A)	Dec. 1897
Parker, George, 62, John Street, Sunderland	(A)	Dec. 1899
Petersen, William, Kenton Lodge, Gosforth, Newcastle-upon-Tyne	(S O)	Nov. 1893
Pilditch, Alfred, Grange Villa, Jarrow-on-Tyne	(A)	Nov. 1903
Pinkney, Thomas, 3, Ashbrook Terrace, Sunderland	(S O)	Dec. 1886
Pringle, George Frederick, 8, Grainger Street, Newcastle-upon-Tyne...	(E A)	May 1901
Proctor, J. H., 22, Hawthorn Terrace, Newcastle-upon-Tyne ...	(I M)	Nov. 1893

R

Raine, John, Baltic Chambers, Sunderland	(S O)	Nov. 1897
Ramsay, Norman F., 20, Sanderson Road, Newcastle-upon-Tyne	(B F)	Jan. 1902
Reichwald, A., Finsbury Pavement House, Finsbury Pavement, London, E.C.	(A)	Nov. 1884
Reid, Sidney, Printer, Akenside Hill, Newcastle-upon-Tyne ...		Nov. 1884

ELECTED

Renwick, G., M.P., Messrs. Fisher, Renwick & Co., Collingwood Buildings, Newcastle-upon-Tyne ... ... (S O) Nov. 1884
Rimer, William Thomas, E, Milburn House, Newcastle-upon-Tyne (M) Nov. 1900
Ritson, Arthur, 30, West Sunniside, Sunderland ... ... (S O) Feb. 1899
Robinson, J., Secretary, Clarendon House, Clayton Street, Newcastle-upon-Tyne ... ... Oct. 1904
Robson, John William, Mercantile Chambers, Quayside, Newcastle-upon-Tyne ... ... (M) April 1896
Rogers, Thomas W., 284, Beverley Road, Hull ... ... (A) May 1901

S.

Scholefield, A., 17, Sandhill, Newcastle-upon-Tyne ... ... (S O) Nov. 1884
Simm, William, c/o Messrs. John Taylor & Co., 12, Dean Street, Newcastle-upon-Tyne ... ... (M) Nov. 1905
Sisson, W. E., 9, Northumberland Terrace, Tynemouth ... ... (A) Nov. 1899
Snowdon, W. F., 32, Side, Newcastle-upon-Tyne ... ... (E A) Dec. 1886
Stallybrass, William S., 30, Dean Street, Newcastle-upon-Tyne ... (M) Mar. 1901
Stephenson, George R., c/o Messrs. N. E. Marine Engineering Co., Northumberland Engine Works, Wallsend ... ... (A) Nov. 1899
Storey, Christopher, 13, Sunbury Avenue, Jesmond, Newcastle-upon-Tyne ... ... (A) April 1896
Sutherland, Arthur M., Eastcliffe, Elmfield Road, Gosforth, Newcastle-upon-Tyne ... ... (S O) Nov. 1897
Swinney, Robt. Nesbit, Messrs. Swinney Bros., Ltd., Morpeth, Northumberland ... ... (A) Nov. 1901

T.

Taylor, Edward, Tyneside Works, Scotswood-on-Tyne ... ... (M) Mar. 1902
Taylor. Swainson T., Tyneside Works, Scotswood-on-Tyne ... (M) Mar. 1902
Temple, George T., 20, Beach Avenue, Whitley Bay, Northumberland ... ... (A) Jan. 1899
Thompson, Wm. H., 34, Esplanade, Whitley Bay, Northumberland .. .. (A) Nov. 1899
Thorpe, Samuel. Market Place Chambers, 74, High Street, Sheffield ... ... (I & S M) Feb. 1901
Todd, John Stanley, Maritime Buildings, Newcastle-upon-Tyne (U) Nov. 1895
Tomkins, Harry, 3, Lorne Terrace, Stockton-on-Tees ... (CONTR) Oct. 1902
Towers, Edward, 27, Brandling Park, Newcastle-upon-Tyne ... (A) Oct. 1888
Towers, Michael G., Clementhorpe, North Shields ... ... (A A) Dec. 1899
Trechmann, Otto K., Church Street, West Hartlepool ... ... (S O) Oct. 1896
Tully, Robert, 9, The Lawe, South Shields ... ... (M S) May 1900
Turner, Edwin, 32, Powell Road, Clapton, London, N.E. ... ... (A) Oct. 1895

W.

Wainford, Edgar H., 3, Woodbine Road, Gosforth, Newcastle-upon-Tyne ... ... (A) Nov. 1899
Ward, Heber, Messrs. Walker & Hall, Sheffield ... ... (A) Feb. 1901
Walton, John Jos., Lloyd's Represent., Lindisferne Holly Avenue, Whitley Bay ... ... Aug. 1905

ELECTED

Watson, Thomas W., Gisburn House, Hartlepool ... ... (M S) Nov. 1890
Weatheral, Henry, 27, Alderson Street, West Hartlepool ... ... (A) Feb. 1893
Weiss, T. L., Marine Superintendent, 5, Quayside, Newcastle-upon-Tyne .. .. (M S) Nov. 1903
Weller, William, 7, Lovaine Terrace, North Shields ... ... (S O) Dec. 1899
Willis, Thomas W., 93, Clifton Avenue, West Hartlepool ... ... (S O) Nov. 1899
Winstanley, Robt. Hope, 25, Westmoreland Road, Newcastle-upon-Tyne... ... ... (A) Nov. 1897
Wisnom, Edward, 44, Marlborough Road, Cardiff ... ... (M S) May 1906

Y.

Yeoman, F., Ship and Steamship Broker, West Hartlepool ... (S O) Nov. 1888
Young, Charles, Pape's Buildings, Pink Lane, Newcastle-upon-Tyne ... ... (M) Nov. 1905
Young, John Barrow, Optician, 46, Dean Street, Newcastle-upon-Tyne ... ... Nov. 1901
Younger, Robert Laurie, Messrs. Greenock Steamship Co., Limited, Greenock ... ... (A) Feb. 1889

GRADUATES.

A.

Anderson, Thomas C., Bigges Main House, Wallsend-on-Tyne ... (E) Mar. 1902
Atkinson, Harry, 137, Park Road, Newcastle-upon-Tyne ... ... (E) Nov. 1901
Ayre, Amos L., 11, Green's Place, South Shields ... ... (S) Nov. 1904

B.

Bailey, Ralph U., 8, Lovaine Crescent, Newcastle-upon-Tyne ... (E) Dec. 1901
Bainbridge, Thos. Lindsay, 25, Picton Place, Newcastle-upon-Tyne (S) Dec. 1903
Ballard, Maxwell, Wesley Manse, Lesbury Road, Heaton, Newcastle-on-Tyne ... ... (S) Nov. 1904
Batty, George L., 6, Tweed Street, Berwick-on-Tweed ... ... (EE) Mar. 1903
Bedlington, A. S., 15, Brinkburn Terrace, South Shields ... ... (S) Nov. 1904
Berriman, A. E., 128, Fordwych Road West, Hampstead, London, N.W. ... ... (E E) Feb. 1900
Binns, Oswell Barritt, 21, St. Thomas' Crescent, Newcastle-upon-Tyne ... ... (E A) Jan. 1906
Blake, Leonard James, 20, Laburnum Avenue, Wallsend-upon-Tyne (E) Dec. 1903
Bland, T. E., 4, Normanby Terrace, Gateshead ... ... (E) Feb. 1905
Bolton, Frank, Beaconsfield Square, Hartlepool ... ... (S) May 1903
Brandt, Ferdinand Hans Christian, 271, Albert Road, Jarrow ... (S D) Jan. 1906
Brown, George M., 4, Hawthorn Terrace, Newcastle-upon-Tyne ... (EE) Mar. 1903
Brown, Rochester, 67, Osborne Road, Jesmond, Newcastle-upon-Tyne ... ... (E) Jan. 1905
Buchanan, Archibald, 106, Meldon Terrace, Heaton, Newcastle-upon-Tyne ... ... ( ) Oct. 1904
Bullen, Harold, 15, Kent Street, Jarrow-on-Tyne ... ... (E) Dec. 1902
Burnup, E. Cyril, 2, Wentworth Place, Newcastle-upon-Tyne ... (EE) Mar. 1903

C.

ELECTED.

Caird, Charles D., Westwood, Washington, R.S.O., County Durham ... ... (E P) Nov. 1905
Campbell, Hugh, 41, Ferndale Avenue, Wallsend-on-Tyne ... (E A) Nov. 1905
Carr, Stuart, Thornleigh, Jesmond, Newcastle-on-Tyne ... .. (EE) Nov. 1904
Challoner, Rex. T., 11, Landsdowne Terrace, Gosforth, Newcastle-upon-Tyne ... ... (E A) Nov. 1905
Cooper, Wm. L., Park House, Jarrow-on-Tyne ... ... (E) Nov. 1903
Cothay, Frank H., 38, The Avenue, Sunderland ... ... (E) Feb. 1901
Coull, Thomson, c/o Red Star Line, Département Technique, Antwerp ... ... (E) Dec. 1902
Cox, Harry Jasper, 25, Picton Place, Newcastle-upon-Tyne ... (S) Dec. 1903
Crawford, T. W., 10, Haldane Terrace, Newcastle-upon-Tyne ... (E) Nov. 1903
Creagh, Edward Curry, 1, Olive Street, Sunderland ... ... (E) Nov. 1904
Crow, William George, Holme Lea, Darlington ... ... (E) Nov. 1900
Cruickshank, Andrew, Gerrie House, Park Road, Hebburn-on-Tyne (E) Nov. 1899
Curry, Albert, 68, Ryehill, Newcastle-upon-Tyne ... ... (E) Nov. 1901
Cuttle, Henry H., 109, Castle Road, Scarborough ... ... (E) Jan. 1902

D.

Davies, Thomas, 8, Cardiff Street, Aberdare, South Wales ... (E E) Mar. 1903
Dearlove, T. M., 4, Normanby Terrace, Gateshead ... ... (E) Feb. 1905
Dilworth-Harrison, D. R., Park House, Jarrow-on-Tyne ... ... (E E) Nov. 1899
Drew, Robert P., 12, Laburnum Avenue, Wallsend-on-Tyne ... (E D) Nov. 1905
Driver, John Wm., 21, Grosvenor Place, North Shields ... .. (E) Feb. 1904
Dyke, F. S., St. James, Claremont Street, Newcastle-upon-Tyne ... (E) Nov. 1903

F.

Farina, Victor, J.P., Oakwood House, Park Parade, Newcastle-upon-Tyne ... ... (E A) Nov. 1905
Finlay, George, 27, Clayton Park Square, Newcastle-upon-Tyne... (E) Nov. 1902
Fothergill, Henry, St. James, Claremont Street, Newcastle-upon-Tyne ... ... (E A) Dec. 1905

G.

Glencross, Julian, 23, Osborne Terrace, Gosforth, Newcastle-upon-Tyne ... ... (E E) Nov. 1904
Goddard, Charles G. W., 14, Railway Terrace, North Shields ... (E) Mar. 1906
Goddard, James Alan, 7, Affleck Street, Gateshead-on-Tyne .. (E A) May 1906
Green, Fred. Wm., 20, Salisbury Gardens, Newcastle-upon-Tyne (E) Jan. 1902
Grey, Robert Bertram, 15, Victoria Villas, W., Newcastle-upon-Tyne (E) Oct. 1900

H

Hamilton, Francis A. W., 42, Lovaine Place, Newcastle-upon-Tyne ... ... (E E A) Dec. 1905
Heck, William D., 29, Brighton Grove, Newcastle-upon-Tyne ... (E) Jan. 1902
Hedley, Ralph, Jun., 19, Belle Grove Terrace, Newcastle-upon-Tyne (E E) Dec. 1899

ELECTED.

Henderson, Joseph Nevison, 60, Woodbine Street, Gateshead-upon-Tyne ... ... (E) Dec. 1903
Hobson, J. W., 53, Bishop's Road, Benwell, Newcastle-upon-Tyne ... (E) Nov. 1903
Holzapfel, F. Maximilian, 30, West Parade, Newcastle-upon-Tyne ... ... (E E A) Dec. 1905

J.

James, Chas A., 39, Beverley Terrace, Cullercoats ... ... (S) Nov. 1903
Jennings, Edward C., 30, Beaconsfield Street, Low Fell, Gateshead-on-Tyne ... ... (E) Nov. 1901

K.

Kirk, Malcolm, 91. Wharncliffe Street, Newcastle-upon-Tyne ... (E E) Mar. 1903
Knight, Robt. C., Elswick Shipyard, Newcastle-upon-Tyne ... (S) Nov. 1901

L.

Lamb, Robert, 98, Derwent View, Newcastle-upon-Tyne ... ... (E) Apr. 1903
Lammas. Fred Harrison, 16, Lovaine Place, Newcastle-upon-Tyne (E) Nov. 1904
Little, John, High Street, Felling-on-Tyne ... ... (E) Feb. 1903
Lloyd, J. A. B., 21, Somerset Terrace, Walker-on-Tyne ... .. (E) Oct. 1904
Lovatt, John James, 15, Kingsley Place, Heaton, Newcastle-upon-Tyne ... ... (E) Jan. 1903

M.

MacDonald, Hector Duncan, 5 Park Parade. Westmorland Road, Newcastle-upon-Tyne ... ... (E A) Jan. 1906
Mallet, James F.. The Grove, Gosforth, Newcastle-on-Tyne ... (E) Nov. 1904
Matheson, Ian Ross, The Clack, Hebburn-on-Tyne ... ... (S) Dec. 1902
Matthews, John Wm., 15, Hillside, Tunstall Road, Sunderland ... (S) Feb. 1904
McFarlane, A., 7, Elmwood Street, Sunderland ... ... (E) Oct. 1904
McRae, Alexander, 103, Chillingham Road N., Heaton, Newcastle-upon-Tyne ... ... (S) Mar. 1903
McWilliams, Edwin J., 95, Wingrove Avenue, Newcastle-upon-Tyne (E E) Mar. 1903
Mountain, Kenneth A., The Hermitage. Gateshead-on-Tyne (E E A) Dec. 1905

N.

Neill, John. B.Sc., c/o Messrs. Denny & Co., Engine Works, Dumbarton ... ... (E) Nov. 1901
Nichol, Robert, c/o Messrs. Thwaites Bros., Vulcan Ironworks, Bradford ... ... (E) Feb. 1902
Nichols, George Henry, 30, Denmark Street, Gateshead-on-Tyne (E) Oct. 1900

O.

Osbourne, Thomas B., The Oaks West, Sunderland ... ... (E A) Nov. 1905

P.

Peel, Middleton L., 5, Regent Terrace, Gateshead-on-Tyne (E E A) Dec. 1905
Phillips, Alexander, 15, Park Avenue, Wallsend-on-Tyne... ... (S) Dec. 1902
Pinder, John c/o Messrs. Adamez, Limited, Sanitary Engineers, Scotswood-on-Tyne ... ... (E) Mar. 1904
Pledge, Harry, 132, Fairholme Road, Benwell Grove, Newcastle-upon-Tyne ... ... (E E A) Nov. 1905

ELECTED.

Porter, Norman, 26, Deuchar Street, Jesmond, Newcastle-upon-Tyne ... ... (E E) April 1905
Pringle, R. A., 16, Second Avenue, Heaton, Newcastle-upon-Tyne (E E) Nov. 1901

R.

Race, Allan, 7, Ravensworth Terrace, Gateshead-on-Tyne ... (A E D) Feb. 1906
Ritson, Roland, Daneholme, Sunderland ... ... (D) Nov. 1905
Robinson, Joseph, 31, Percy Gardens, Tynemouth ... ... (E P) Dec. 1905

S

Samson, Robert D., Oakleigh, Stanningley Road, Armley, Leeds ... (E) Feb. 1902
Scott, Keith S. M., B.Sc., Woodcote, Long Benton, near Newcastle-upon-Tyne ... ... (E) Nov. 1905
Sedcole, W. J., 17, Westoe Road, South Shields ... ... (E) Feb. 1905
Shackleton, William L. C., 64, St. George's Terrace, West Jesmond (E A) Nov. 1905
Skelt, Stanley, c/o Messrs. The Sunderland Shipbuilding Co., South Docks, Sunderland... ... ... (S) Nov. 1904
Slee, Herbert Teal, 37, Grosvenor Place, Newcastle-upon-Tyne ... (E) Jan. 1903
Smith, John E., 15, Eslington Terrace, Newcastle-upon-Tyne ... (E) Nov. 1897
Smith, Thomas, 15, Eslington Terrace, Newcastle-upon-Tyne ... (E E) Jan. 1906
Spittle, Henry Stuart, 20, Eskdale Terrace, Newcastle-upon-Tyne (E) Oct. 1900
Stanger-Leathes, C. Francis, 192, Heaton Road, Heaton, Newcastle-upon-Tyne ... ... (S) Dec. 1903
Stirzaker, Stanley C., 16, Grosvenor Place, Newcastle-upon-Tyne (E) Nov. 1901
Stokoe, M. B., 12, The Oaks, Sunderland ... ... (S) Oct. 1904

T.

Talbot-Palmer, Edward, 172, Bede Burn Road, Jarrow-on-Tyne ... (E) Feb. 1904
Taylor, John Allibon, 1, St. Alban's Place, Tynemouth ... ... (E) Feb. 1904
Tchigianoff, Alec., 45, Lovaine Place, Newcastle-upon-Tyne ... (E) Nov. 1903
Thompson, John, 20, Warren Street, de Beers, Kimberley, South Africa ... ... (E E) Mar. 1903

W.

Wardroper, Arthur K., Walker Vicarage, Walker-on-Tyne ... (E) Dec. 1901
Watson, Arthur William, 29, Front Street, Tynemouth ... ... (S) Dec. 1903
Watson, John G. B., 5, Nesham Street, Newcastle-on-Tyne ... (S) Jan. 1902
Webb, Edmund, 231, Cardigan Terrace, Gateshead ... ... (E) Nov. 1903
Webster, Peter, Thornville, Lesbury Road, Heaton, Newcastle-upon-Tyne ... ... (S) Dec. 1903
Weetman, John H., 87, Wharncliffe Street, Newcastle-upon-Tyne (E P) Nov. 1905
White, William, 8, Poplar Crescent, Gateshead-on-Tyne ... ... (E) Nov. 1904
Whiting, W. R. G., B.A., 83, Park Road, Newcastle-upon-Tyne ... (S) Nov. 1903
Wilson, William, "Lancefield," Kellfield Avenue, Low Fell, Gateshead-on-Tyne ... ... (E) Feb. 1902
Wright, Albert T., 12, Holly Avenue, Newcastle-upon-Tyne ... (E D) Dec. 1905

Y.

Young, G., 19, Fern Avenue, Newcastle-upon-Tyne ... ... (E A) Dec. 1905

NORTH-EAST COAST INSTITUTION

OF

ENGINEERS AND SHIPBUILDERS.

TWENTY-SECOND SESSION, 1905-1906.

PROCEEDINGS.

The Twenty-second Session of the Institution was opened on the evening of Monday, October 30th, 1905, with a Conversazione and Ball, at the invitation of the President (the Right Hon. Lord Armstrong, M.A., D.C.L., J.P.) and Lady Armstrong, in the Assembly Rooms, Westgate Road, Newcastle-upon-Tyne, and was attended by a large assemblage of ladies and gentlemen.

FIRST GENERAL MEETING OF THE SESSION, HELD IN THE LECTURE THEATRE OF THE LITERARY AND PHILOSOPHICAL SOCIETY, WESTGATE ROAD, NEWCASTLE-UPON-TYNE, ON FRIDAY EVENING, 24TH NOVEMBER, 1905.

THE RIGHT HON. LORD ARMSTRONG, M.A., D.C.L., J.P., PRESIDENT, IN THE CHAIR.

The SECRETARY read the minutes of the Closing Business Meeting of the previous Session, which were confirmed by the members present and signed by the President.

The PRESIDENT appointed Mr. David Andrew and Mr. W. Swinney to examine the voting papers, and the following gentlemen were declared elected:—

MEMBERS.

Adamson, David, E. Draughtsman, 6, Grosvenor Road, Newcastle-upon-Tyne.

Arkins, Walter, Marine Engineer, 12, Laverton Street, Williamstown, Victoria, Australia.

Ball, Ralph H. C., Engineer Lieut., R.N., H.M.S. "Charybdis," Chatham.

Belford, David, Supt. Engineer, 15, Eldon Place, Newcastle-upon-Tyne.

Bradney, Walter, Supt. Engineer, Billiter Buildings, Billiter Street, London, E.C.

Cowan, William W., E. Draughtsman, 1, Radbourne Terrace, Gateshead-upon-Tyne.

Douglas, Andrew, Supt. Engineer, 11, Day Street, Newcastle-upon-Tyne.

English, George W., Marine Engineer, Ash Lea House, South Hylton, near Sunderland.

Fisher-Christensen, J. A. L., E. Draughtsman, Armagh House, Dene View, Wallsend-on-Tyne.

Gaisford, Harold, R.N., Engineer Com., Alexandra House, Marine Parade, Sheerness.

Job, Norris H., Civil Engineer, 32, Swarthmoor Terrace, Thornaby-on-Tees.

Lyon, William J., Engineer, 10, Lynnewood Place, Maryfield, Dundee, N.B.

Maillard, James, E. Draughtsman, 307, Beaconsfield Street, Newcastle-upon-Tyne.

McFarlane, John T., Shipbuilder, Craigmore, Cargil Terrace, Trinity, Leith, N.B.

Murray, Athole J., S. Draughtsman, Hussendean, Holywell Avenue, Monkseaton, Northumberland.

Parish, William F., junr., Engineer, Messrs. Vacuum Oil Co., Ltd., 4, Norfolk Street, Strand, London.

Pilling, Joseph H., E. Draughtsman, 31, Roker Park Road, Roker, Sunderland.

Robinson, Alfred E., Marine Engineer, 8, Summerhill E., Sunderland.

Robson, John, E. Draughtsman, 25, Lawton Street, Newcastle-upon-Tyne.

Taylor, Sydney T., S. Draughtsman, 22, Cardigan Terrace, Heaton, Newcastle-upon-Tyne.

Thomson, Harold, Engineer, c/o Messrs. George Clark, Ltd., Southwick Engine Works, Sunderland.

Tierney, John W., Engineer, c/o Messrs. The Globe Pneumatic Engineering Co., Ltd., 150, Queen Victoria Street, London, E.C.

Webb, William H., E. Draughtsman, 21, Farndale Road, Newcastle-upon-Tyne.

White, Ernest Saxton, B.Sc., S. Draughtsman, Shirley, Jesmond, Newcastle-upon-Tyne.

GRADUATES TO MEMBERS.

Allan, Percy F., E. Engineer, 27, Edith Street, Jarrow-on-Tyne.

Gibbs, Alfred P., Engineer, 83, Goldhurst Terrace, South Hampstead, London, N.W.

Ogilvie, William, E. Engineer, 19, Woodbine Road, Gosforth, Newcastle-upon-Tyne.

ASSOCIATES.

Dingle, Charles, Marine Supt., 54, Leazes Terrace, Newcastle-upon-Tyne.
Simm, William, Merchant, c/o Messrs. John Taylor & Co., 12, Dean Street, Newcastle-upon-Tyne.
Young, Charles, Merchant, Pape's Buildings, Pink Lane, Newcastle-upon-Tyne.

GRADUATES.

Caird, Charles D., E. Pupil, Westwood, Washington, R.S.O., County Durham.
Campbell, Hugh, E. Apprentice, 41, Ferndale Avenue, Wallsend-on-Tyne.
Challoner, Rex T., E. Apprentice, 11, Lansdowne Terrace, Gosforth, Newcastle-upon-Tyne.
Drew, Robert P., E. Draughtsman, 12, Laburnum Avenue, Wallsend-on-Tyne.
Farina, Victor, J.P., E. Apprentice, Oakwood House, Park Parade, Newcastle-upon-Tyne.
Hunter, Elliott C., E. Apprentice, 27, Percy Gardens, Tynemouth.
Osbourne, Thomas B., E. Apprentice, The Oaks West, Sunderland.
Pledge, Harry, Elec. E. Apprentice, 132, Fairholme Road, Benwell Grove, Newcastle-upon-Tyne.
Ritson, Roland, Draughtsman, Daneholme, Sunderland.
Shackleton, William L. C., E. Apprentice, 64, St. George's Terrace, West Jesmond, Newcastle-upon-Tyne.
Scott, Keith S. M., B.Sc., Engineer, Woodcote, Long Benton, near Newcastle-upon-Tyne.
Weetman, John H., Engineer Pupil, 87, Wharncliffe Street, Newcastle-upon-Tyne.

VOTE OF THANKS.

Mr. J. R. Fothergill said—I rise to propose a vote of thanks to the President and to Lady Armstrong for the very gracious, kindly, and affable manner in which they gave us the conversazione. I am sure I shall have only one feeling from you all, that we are much indebted to Lord Armstrong, and that we very much appreciated the way in which we were entertained the other night. I do not think it is necessary for me to say many words on this question, but I think the mere expression of our gratification and pleasure perhaps meets the requirements. I therefore propose that a very hearty vote of thanks be given to Lord Armstrong and to Lady Armstrong for their gracious and kindly manner of entertaining us and receiving us the other evening at a conversazione.

Mr. David Andrew said—I beg to second Mr. Fothergill's motion.

The motion was carried with very cordial acclamation.

The PRESIDENT (Lord Armstrong) said—I thank you very much for the kind vote of thanks you have accorded to Lady Armstrong and myself in connection with the conversazione. I can only say it was a great pleasure to us to welcome you all there, and I am glad we had such a pleasant evening.

The SECRETARY submitted the Council's Annual Report and Financial Statement, which were as follows:—

COUNCIL REPORT.

(TWENTY-FIRST SESSION, 1904-1905.)

The Twenty-first Session of the Institution was opened on Friday, October 21st, with an inaugural address delivered by the new President (The Right Hon. Lord Armstrong, M.A., D.C.L., J.P.), and during the year the following papers were read and discussed:—

"A Comparison of Vertical and Horizontal Tubes in Water-tube Boilers." By Mr. W. R. Cummins.

"Launch of the U.S.A. Cruiser 'South Dakota.'" By Mr. James Dickie.

"Petrol Motor Cars." By Mr. Frank Little.

"Application of Electricity to Industrial Purposes." By Mr. J. F. C. Snell.

"Boiler Furnaces and the effect of Oil on their Ultimate Strength." By Mr. D. B. Morison.

In addition to the above, the question of "The Board of Trade Regulations for Certificated Marine Engineers" was introduced by Mr. D. B. Morison and discussed at a Special Meeting of the Institution held on March 3rd, 1905.

The report of the work done by the Consultative Committee, appointed to confer with the Marine Department of the Board of Trade, up to March, 1905, having been received, was printed and added to the twenty-first volume of the *Transactions* of the Institution.

The great and urgent need of impressing the engineering requirements of the district on the public authorities entrusted with national education having been brought before the Council, the following letter was drawn up and sent to the various educational committees for their consideration.

4, ST. NICHOLAS' BUILDINGS WEST,
NEWCASTLE-UPON-TYNE,
February 14*th*, 1905.

SIR,

The Council of the North-East Coast Institution of Engineers and Shipbuilders at its meeting on November 14th, 1904, decided to offer any assistance in its power to Education Authorities in the North Eastern District with the object of providing a suitable education for youths intended for the engineering

and shipbuilding professions. The Institution has formed a Special Committee for the consideration of all questions relating to the training and education of engineers and shipbuilders, and this Special Committee will be glad to co-operate with Education Committees in furthering technical and secondary education.

The Council would also be willing to suggest the names of suitable members for co-operation on committees when they are being formed at the beginning of each year.

Yours truly,

(Signed) ARMSTRONG, President.

The lease of the present premises occupied by the Institution having expired on July 31st, 1905, it was arranged that they should now be occupied on a yearly tenancy and that steps be taken at an early date to obtain other premises to suit the present requirements of the Institution.

The Engineering Gold Medal for the Twentieth Session was awarded to Mr. Max Wurl for his paper on "Technical Education in Germany."

An alteration was made in Bye-law 11, regarding the nominations of members to supply the vacancies in the Council list, whereby it is now compulsory for the Council to nominate two members in excess of the number required to fill the vacancies in each department in place of one as heretofore.

Mr. E. Griffith having resigned his seat on the Council Mr. D. R. Macdonald was elected to fill the vacancy.

The financial statement for the year ending July 31st, 1905, is appended to this report. The Council regrets having to state that the sum of £48 6s. for subscriptions in arrears has been written off as irrecoverable, and in addition there is still due to the Institution the sum of £96 12s. for unpaid subscriptions for the last year.

During the year the following additions have been made to the roll of members:—27 Members, 3 Associates, 22 Graduates; and 12 Graduates have been passed into the Members' section.

The Council regrets having to record the loss by death of the following:—Life Member: Mr. J. R. Pascoe. Members: Mr. W. Black, Mr. C. J. D. Christie, Mr. James Dykes, Mr. W. E. James, Mr. James Larkin, Mr. Frank T. Marshall, Mr. A. A. Rickaby, Mr. W. Swainston, Mr. T. Thorman and Mr. M. Watson. Associate: Mr. Frank Caws.

The Institution has also lost by resignations and other causes: 66 Members, 13 Associates and 14 Graduates.

The total number of members now enrolled is as follows:—

Honorary Members	5
Life Members	7
Members	837
Life Associates	3
Associates	125
Graduates	106
	1,083

GRADUATE SECTION.

At the beginning of the Session a letter was received from the Committee of the section petitioning the Council to sanction the adoption of the two following resolutions, namely:—

"That a sub-committee be formed out of the Graduate Section to read over and accept or reject any paper before it is read at any General Meeting of the section."

"That instead of the usual form which is sent out before each General Meeting of the section, a short summary of the paper be prepared by the said Committee and be printed and circulated among the Graduate Members previous to the meeting at which the paper will be read."

These two resolutions were sanctioned by the Council.

During the Sixteenth Session of the section five meetings were held.

At the opening meeting the Chairman (Mr. Kenneth Watson) delivered his inaugural address on the "Progress of Marine Engineering and Shipbuilding during the last thirty years," and during the Session the following papers were read and discussed:—

"Application of Electricity to the Driving of Machinery." By Mr. R. A. Pringle.

"Centrifugal Pumps." By Mr. F. W. Green.

"Marine Evaporators." By Mr. J. Neill.

"Construction and Testing of Direct Current Motors." By Mr. H. Hogarth.

The following Engineering Works were visited:—

The Newcastle-upon-Tyne Electric Supply Co.'s Power Station, Carville.
Messrs. Cowan & Sheldon's Engineering Works, Carlisle.
Messrs. R. & W. Hawthorn Leslie & Co.'s St. Peter's Works, Newcastle-upon-Tyne.
Messrs. N. E. Marine Engineering Co.'s Northumberland Works, Wallsend.

The thanks of the Institution are due to the principals and officials of these establishments for the kind hospitality and courtesy extended to the junior members.

The following awards were granted to the authors of papers read before the section during the Fifteenth Session:—

The sum of £3 to Mr. W. H. Waddingham, for his paper on "Producer Gas and its Uses."
The sum of £2 to Mr. N. H. Burgess, for his paper on "The Relation of Indicated Horse Power to Speed in Steam Vessels."
The sum of £1 to Mr. A. E. Berriman, for his paper on "The Future Prospects of Automobilism."
The sum of £1 to Mr. J. T. Taylor, for his paper on "Injectors and Ejectors."

It is intended to include Mr. W. H. Waddingham's paper on "Producer Gas and its Uses" in the current volume of the *Transactions*.

Mr. Kenneth Watson was re-elected Chairman and Mr. A. Tchigianoff was elected Honorary Secretary of the section for the current year.

THE BALANCE SHEET FOR SESSION ENDING 31ST JULY, 1905.

Liabilities.

		£ s. d.	£ s. d.
Gold Medals' Fund—			
Amount at 31st July, 1904 ...	£315 0 9		
Interest on Investment ...	9 2 2		
		324 2 11	
Less Medal awarded		5 10 0	
			318 12 11
Graduates' Award Fund—			
Amount at 31st July, 1904		222 17 4	
Interest on Investment		7 3 6	
			230 0 10
Payments by Life Members and Associates—			
Amount at 31st July, 1904			252 0 0
General Capital as at 31st July, 1904		3,009 18 5	
Deduct—Balance of Revenue Account-Debit...		107 19 1	
			2,901 19 4
			£3,702 13 1

Audited and certified,
R. W. & J. A. SISSON,
Chartered Accountants.

Newcastle-upon-Tyne,
10th November, 1905.

Assets.

		£ s. d.	£ s. d.
Subscriptions in Arrear—			
Session 1902-1903		2 2 0	
Session 1903-1904		9 9 0	
Session 1904-1905		85 1 0	
			96 12 0
Stock of Transactions, valued at			258 0 9
Office and Library Furniture,			
Safe, etc., as at 31st July, 1904	£118 0 0		
Additions	2 15 0		
		120 15 0	
Less—Depreciation		11 16 0	
			108 19 0
Books in Library—			
As at 31st July, 1904 ...	349 15 6		
Less—Depreciation ...	34 10 0		
		315 5 6	
Additions this Session—			
Purchases		31 18 4	
Books received in exchange for Transactions		30 0 0	
			377 3 10
Tyne Improvement Commissioners—Investment in respect of the following Accounts, viz.:—			
Gold Medals' Fund		274 0 0	
Graduates' Award Fund and Payments by Life Members and Associates		331 0 0	
General Capital—			
As at 31st July, 1904		2,000 0 0	
			2,605 0 0
Cash—At Bank			256 17 6
			£3,702 13 1

NORTH-EAST COAST INSTITUTION OF

STATEMENT OF RECEIPTS AND PAYMENTS

Receipts.

		£ s. d.	£ s. d.
To Balance from last Account—			
At Bank			382 1 0
„ Subscriptions received for Session 1904-1905—			
228 Members at £2 2s.	£478 16 0		
569 Members „ £1 1s.	597 9 0		
131 Associates „ £1 1s.	137 11 0		
103 Graduates „ 10s. 6d.	54 1 6		
1,031		1,267 17 6	
„ Association of Foremen Engineers and Draughtsmen—			
One year's Subscription		20 0 0	
„ Arrears from Session 1903-1904—			
9 Members at £2 2s.	£18 18 0		
40 Members „ £1 1s.	42 0 0		
5 Associate „ £1 1s.	5 5 0		
6 Graduate „ 10s. 6d.	3 3 0		
		69 6 0	
			1,357 3 6
„ Transactions sold this Session		30 2 9	
„ Copies of Members' Papers supplied		8 11 9	
			38 14 6
„ Tyne Improvement Commissioners—			
One Year's Interest to 21st June, 1905, on £605, at 3½ per cent.		21 3 6	
Viz.:—Medal Fund	£274		
Graduates' Award and Life Members' Fund	331		
	£605		
Less—Tax		1 1 2	
			20 2 4
One Year's Interest to 10th July, 1905, on £500, at 3¾ per cent.		18 15 0	
Less—Tax		0 18 8	
			17 16 4
One Year's Interest to 4th May, 1905, on £300, at 3 per cent.		9 0 0	
Less—Tax		0 9 0	
			8 11 0
One Year's Interest to 13th July, 1905, on £300, at 3¼ per cent.		9 15 0	
Less—Tax		0 9 8	
			9 5 4
One Year's Interest to 9th June, 1905, on £300, at 3¼ per cent.		9 15 0	
Less—Tax		0 9 8	
			9 5 4
One Year's Interest to 8th May, 1905, on £300, at 3½ per cent.		10 10 0	
Less—Tax		0 10 6	
			9 19 6
One year's interest to 5th May, 1905, on £300 at 4 per cent.		12 0 0	
Less—Tax		0 12 0	
			11 8 0
General Capital Invested ...	£2,000		
			£1,864 6 10

ENGINEERS AND SHIPBUILDERS.

FOR SESSION ENDING 31ST JULY, 1905.

Payments.

	£ s. d.	£ s. d.
By Transactions and Papers—		
Lithographing	320 11 0	
Printing and Binding	260 19 11	
		581 10 11
„ Stationery and Circulars	77 16 9	
„ Reporting	19 14 0	
„ Rents—		
Offices and Electric Light Fittings	113 6 3	
Lecture Rooms	4 10 0	
Telephone	7 15 0	
		223 2 0
„ Rates, Gas, Electric Light, and Insurance...		29 17 8
„ Salaries—		
Secretary, Salary	400 0 0	
„ Commission	66 18 3	
Assistants'	55 6 0	
„ Postages, Stamps, Post Cards, Parcels, etc.	124 3 5	
„ Secretary's and Office Expenses, Coal, Cleaning, etc. ...	70 18 3	
„ Measured Mile Posts—Rent...	6 6 0	
„ Auditor's Fee	5 5 0	
„ Lantern Expenses	3 18 6	
		732 15 5
„ Library Account—		
New Books	21 0 5	
Bookbinding	10 17 11	
		31 18 4
„ Gold Medal Fund—		
Gold Medal awarded		5 10 0
„ Furniture Account—		
Additions		2 15 0
„ Balance at Bank		256 17 6
		£1,864 6 10

The Report and Financial Statement were adopted *nem. con.*

The PRESIDENT delivered his Opening Remarks.

Mr. C. SCHOFIELD read a paper on "Pneumatic Tools as Applied to Ship Construction and their Advantage to Shipbuilders and Engineers."

PRESIDENT'S OPENING REMARKS.

The PRESIDENT said—I have much pleasure in presiding here to-night at the opening meeting of our Twenty-second Session, and I am glad to think that this month the Institution comes of age, and that it is in a very healthy and strong position.

Its membership consists of about 1,100 members, which is a very large number, and I am glad that the Institution is so much appreciated by the engineers and shipbuilders of this district. This number, large as it is, is not, however, the maximum number that the Institution has attained to, for during the past year we have lost from various causes some 66 members, 13 associates, and 14 graduates, while we have only gained 27 new members, 3 associates, and 22 graduates.

Then, in reference to the report, I am sorry to see that for the first time in the history of the Institution there is a slight deficit; but I may explain that this is due to the very intricate character of some of the papers which were delivered last Session, which entailed considerable expense in printing. I do not think, however, that it is likely that so large an expense for printing will occur again.

There is one other point I should like to allude to. That is the fact of the non-payment by some members of their subscriptions. I notice that we have had to write off some £48 on account of the non-payment of subscriptions, and that there still remains unpaid £96 12s. in subscriptions. I think that members should really take the matter in hand, and, if they have not paid their subscriptions, they should come forward and pay them. It should be considered by all members to be a privilege to belong to a society such as this, and every member should strive his utmost to uphold the Institution in every way that he can, and one of the first ways of doing this is to see that the subscriptions are regularly paid. I have no doubt that this is in many instances due to forgetfulness, but I hope those members who have not paid will take the matter in hand, and pay their subscriptions as soon as possible.

I am glad to say that there is a good prospect of interesting papers during the ensuing Session. We are going to have a paper on "Lubricating Oils" by Mr. Parish, one on "Commercial Dry Docks" by Mr. Moncrieff and one on "Condensers" by Professor Weighton; and I may add that Mr. Duckitt would be glad to hear from any members who may have papers that they would like to deliver before the Institution. To-night we have a very interesting paper before us on "Pneumatic Tools as Applied to Ship Construction and their Advantages to Shipbuilders and Engineers," by Mr. C. Schofield, and I am sure we shall all listen to that paper with very great pleasure. I must not detain you with any further remarks on my part, except to express the hope that the Session may prove a very interesting and profitable one to the members of the Institution and through them to the professions of engineering and shipbuilding. I now have much pleasure in asking Mr. Schofield to address us.

PNEUMATIC TOOLS AS APPLIED TO SHIP CONSTRUCTION AND THEIR ADVANTAGES TO SHIPBUILDERS AND ENGINEERS.

By C. SCHOFIELD, Member.

[Read in Newcastle-upon-Tyne on November 24th, 1905.]

About three years ago the Society of Shipyard Managers of the United States decided to ascertain whether pneumatic tools as applied to ship construction were a financial success or not, and what actual advantages accrued to their use. They appointed a committee, instructing them to make the necessary inquiries from the various shipbuilders of America, and report the result of their labours at the next meeting. The paper presented to the meeting by the committee caused more discussion and diversity of opinion than any other topic during the whole session. The reports of the various shipbuilders as returned to the Society disclosed a most satisfactory state of affairs, and proved beyond a doubt that pneumatic tools as applied to ship construction were a known quantity and beyond the experimental stage. The information thus obtained was not only interesting but instructive to the members generally.

I will endeavour in my paper to explain the methods adopted in the American shipyards as to the application of pneumatic tools in ship construction, also the cost of same, and make a comparison with the British piece-work hand rates.

Pneumatic Chipping Hammer.—The first portable pneumatic tools introduced to shipbuilders were chipping hammers (Plate I., Figs. 1 and 2). A pneumatic chipping hammer consists of a working cylinder, having attached to it a grasping handle, and enclosing a reciprocating piston and a valve box containing a reciprocating valve. In the lower part of the handle the air-inlet passage is situated, and is controlled by a piston throttle valve arranged therein, adapted to be operated by a pivoted finger lever. The air, after passing the valve, enters the trans-

verse passage, which communicates with an annular groove situated immediately adjacent to the valve box. This groove serves to distribute the air to the various inlet ports and passages in the valve box. The valve box itself is in the form of a hollow cylindrical block bored out to two different diameters to receive the valve corresponding in shape. The valve box is provided with the necessary ports and passages to admit live air to and exhaust the opposite ends of the cylinder, and for controlling the valve itself in co-operation with the piston. The valve contains no ports or passages, but has two grooves, one cut in the portion of small diameter, and one in that of large diameter. It will be seen that the valve, being made of two diameters, has two pressure surfaces or areas, against the smaller of which air constantly acts to press the valve in one direction; and against the larger area, air under pressure is intermittently admitted through the ports and passages in the valve box and cylinder, those in the cylinder being so controlled by the piston as to move the valve in the opposite direction against the constant live-air pressure on the smaller area. The piston is a solid cylindrical bolt having a groove in its periphery near one end for the purpose of placing in communication with each other the live-air passage, shown in dotted lines, leading from the source of supply to the piston chamber, and another passage leading from the piston chamber to the larger area of the valve. The outer end of the cylinder is partly closed by means of an internal ring and the working tool's socket. When the working tool is inserted into the tool socket the closure of the end of the cylinder is thereby completed.

As shown in the illustration, the valve is in such a position that the air is in contact directly with the piston so as to force it forward at high speed until it hits the tool end. When the portion of reduced diameter of the piston comes opposite to the end of the live-air passage, and puts this into communication with the passage leading back to the large area of the valve, the position of the valve is immediately reversed, whereby the live air passes round the groove in the portion of the valve of large diameter into the passage on the opposite side at the front of the piston, forcing the same in a backward direction. The piston on its return stroke cuts off the supply of air from the larger area of the valve, and the latter returns to its initial position, admitting air behind the piston for the next stroke.

It was with fear and trembling that we, the shipyard managers, attended the several demonstrations prepared for our edification by the various pneumatic tool companies, as of course we were expected to try the tools; and sometimes we thought the piston was taking air at the wrong end on account of the excessive vibration, but this was eventually minimized by the makers adding a little more weight to the hammers. After we had got accustomed to handling the tools and had overcome, to some extent, our prejudice, it became evident to us that the pneumatic chipping hammer had some merit; inasmuch as it could do work in close quarters much better and in less than half the time the same work could be done by hand.

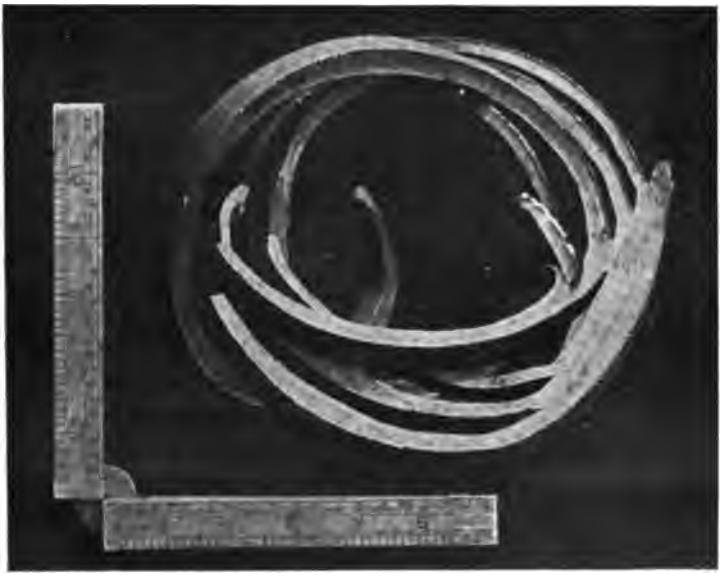

FIG. A.—CHIPPING FROM PLATE EDGE.

It was, however, months before we could get the men using pneumatic tools to admit that there was sufficient benefit derived from their use to warrant a reduction from the hand piece-work rate, and it was only by playing our cards diplomatically that we got our first reduction of 40 per cent. on all chipping and cutting, because, at this time, the men experienced great difficulty in chipping a plate edge to a bevel (see Fig. A), or when dressing a shell butt, on account of the hammers having

round bushings to take the shank of the chisel, whereby the man operating the tool had to twist the chisel as best he could without any assistance from the hammer. But all the up-to-date hammers of to-day have hexagon bushings and the chisels have hexagon shanks to suit, so that the operator can twist the chisel to any desired angle by twisting the hammer, while a caulking iron with a round shank can be used in the same hammer without the bushing being changed. The current piece-work rate for pneumatic chipping, solid cutting and caulking in the United States is about 50 per cent. less than the piece-work hand rates of Great Britain. That is, taking the day-work rates of both countries as a basis. Another feature of the pneumatic caulking hammer is that it caulks the toe of the gunwale, waterway, tank margin and bulk-head bounding bars without their having been either planed or chipped. This allows the builder to order the said angles the same size as he would if they were not to be caulked.

Pneumatic hammers are used extensively by engineers for dressing propeller blades, the palms of struts for vessels with twin screws, bed plates, cutting key ways, cleaning castings, etc., in fact, there is very little hand chipping done in the fitting shops of the American engine builders.

Pneumatic Drills.—When pneumatic drills (see Fig. B) were first introduced to shipbuilders they had to compete with electric drills of all sizes and weight, and during a four weeks' test at the works of Wm. Cramps & Sons, of Philadelphia, the pneumatic drills proved their superiority.

At the time of the test we were building three cruisers and two battleships, which had protective decks made up of two plates, each 1½ inches thick, connected by 1¼ inch rivets. It was on these plates we made the test, the average for the twenty-four days being as follows:—

					Holes drilled by Pneumatic machines.	Holes drilled by Electric Machines.
Air pressure on	12 days,	being	90 lbs.	...	248	100
,,	9	,,	84 ,,	...	232	100
,,	3	,,	76 ,,	...	208	100

The result was that we dispensed with twenty-six electric drills, and took 60 per cent. off the piece-work rate of drilling on

this class of work; we also made a reduction of 60 per cent. on the price of holes drilled in the deck plating for deck planking, and took 50 per cent. off all other drilling on the ship, except odd work.

Pneumatic drills are now used for every conceivable purpose by American shipbuilders, among others, cutting out side-light holes, ventilator and coal port-holes in the deck, boring stern-post gudgeons, wood backing for armour-plate bolts, tube cutting, tube expanding, tapping for stay bolts, screwing in stay bolts, and by using a speed-reducing gear attached to the drill

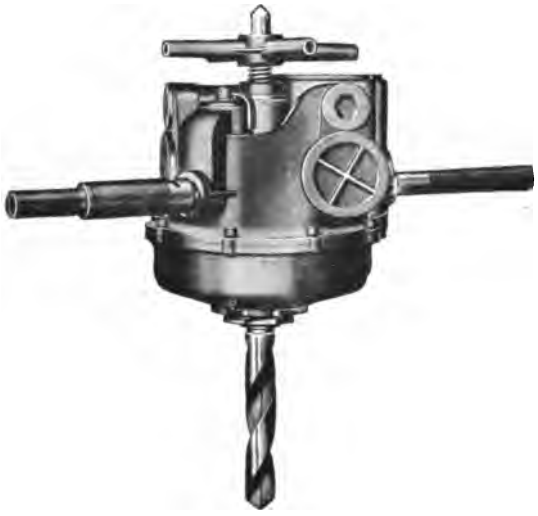

FIG. B.—PNEUMATIC DRILL.

it is possible to tap up to 4 inches diameter, and to operate this combined machine only one man and a boy is required. In fact, the pneumatic drill is an indispensable factor in connection with speedy and economical ship construction in its various branches.

Pneumatic Riveting.—Probably the hardest manual labour in all the various operations in building a ship is that of riveting. Combined with this is a certain amount of technical skill acquired only by an apprenticeship at the trade. A first-class riveter on inside work cannot properly drive shell rivets and *vice versa*, while the boiler riveter, however good he may be at his own work, is of little use on any part of the ship's hull. In

addition to this, the rapidly increasing size of ships, with the corresponding necessity for heavier plating, doublings, etc., requires the use of larger and longer rivets, which cannot properly fill the hole when driven by hand, however skilful or willing the men may be. For all these reasons combined, in the yard of the Cramp Shipbuilding Company, of which I was the shipyard manager, some seven years ago a determined effort was begun and an extended series of experiments entered upon to develop pneumatic machinery capable of being operated by unskilled labour, by which all the rivets in a ship could be driven, which effort has been entirely successful, not only at Cramps but at all the leading shipyards in the States.

I recently sent to the four leading shipbuilders in America the following letter:—

DEAR SIR,—The writer is preparing a paper to be read at the forthcoming meeting of the North-East Coast Institution of Engineers and Shipbuilders to be held next November. I wish to make as complete a report as possible of the great strides made in America in the use of pneumatic tools, and am writing to ask if you will be so good as to cable me the approximate percentage of the entire number of rivets in the shell of a ship which you are now driving with pneumatic tools.

Thanking you in anticipation,

I am, yours faithfully,

(Signed) CHARLES SCHOFIELD.

I received the following cablegrams in reply:—

"Eighty-five to ninety."—JAMES WALLACE, Managing Director for the American Shipbuilding Company.

"Thirty shell, eighty hull."—ORCUTT, President of the Newport News Shipbuilding Company.

"One hundred."—WILSON, General Manager Marine Department, The Maryland Shipbuilding and Steel Company, Sparrows Point.

"Ninety-nine."—CRAMPS.

The last cablegram was confirmed by letter as follows:—

In re APPROXIMATE PERCENTAGE OF ENTIRE NUMBER OF RIVETS IN THE SHELL OF A SHIP.

GENTLEMEN,—We are in receipt of your favour of the third instant and note that at the suggestion of Mr. Charles Schofield you are writing us requesting us to cable you the approximate percentage of the entire number of rivets in the shell of a ship which we are now driving with pneumatic tools.

Immediately upon receipt of your letter we therefore cabled you as follows: "Ninety-nine.—CRAMPS"; and which we now confirm.

Trusting that it reached you in time to be of service to you,

We are, yours very truly,

The William Cramp & Sons' Ship and Engine Building Company,

(Signed) H. W. HAND, General Manager.

We had in use, at that time, a stationary riveter of the ordinary type, driving rivets in such portions of the ship as could be assembled and handled as a whole, namely, frames, water-tight doors, etc., such as are usual in ordinary merchant vessels.

A very short experience with compression riveters showed that their great weight—reaching over 2,500 lbs. for a six-foot gap—interfered too much with facility of handling to make them either useful or economical.

We then turned our attention to the pneumatic hammer (Plate II., Figs. 1 and 2), which delivers an almost continuous series of blows against the end of the chisel, caulking tool, or rivet die. The hammer is light, powerful, short enough to go in between frame spacings, and small enough in diameter to get at rivets in corner angles. For rivets up to ¾ inch diameter it can be held in the hand, but for rivets of a larger diameter the hammer should be held in a device suitable to the location of the work on the vessel, for instance, shell device and deck device. It is, however, almost impossible to hold on to the rivet by hand unless a spring dolly bar is used instead of the heavy holding-on hammer used in hand riveting, the heavy holding-on hammer being fairly jarred off the head of the rivet by the rapidity of the blows from the pneumatic hammer, giving the holder-on no opportunity to bring his tool back into position between blows as in hand riveting.

Portable Pneumatic Yoke Riveter Complete.—In connection with the above-mentioned pneumatic hammer there is used a simple pneumatic holder-on, consisting only of a cylinder carrying a piston, behind which air is admitted, the rod extending through the front head and being cupped out to go over the head of the rivet.

Combining these two machines with a yoke, the hammer being mounted on one arm and the holder-on on the other, makes a self-contained machine in which the yoke can be made very light, as it has to resist only the pressure of the air against the end of the holder-on cylinder, and the reaction of the hammer blows (Plate III.).

Various sizes of these yoke riveters are used for riveting the centre keelsons, longitudinals, side keelsons, etc. They are also

extensively used for riveting certain parts of turrets, gun-carriages, etc., where first-class riveting is absolutely necessary (Plate IV.).

For driving rivets in frames and brackets, intercostals and beam knees, etc., we use a jam riveter and pneumatic holder-on.

The above descriptions and photographs will, I trust, sufficiently make plain the methods for driving all rivets that can be reached on both sides by a yoke or jam riveter. There remain three classes of rivets in a ship, as follow: (1) Those through decks and tank tops, mostly countersunk, and all driven downward from above; (2) bulkhead rivets, nearly all with full heads; (3) those in the outside of the vessel and all countersunk. These three classes must be reached by riveters on one side and holders-on on the other, without any connection whatever between them. The first class are most easily driven, and for them the hammer is attached to a universal swivel head, mounted on a pipe or T bar, as shown in Plate V. The operator raises the hammer to bring the flat die on to the rivet, and, the pipe or T bar being secured at the centre, holds the hammer in position while the rivet is being driven. A second man with a pneumatic chipping hammer cuts off the surplus metal, and, the riveting hammer being brought back on the rivet, a few seconds complete the operation. In this case the pneumatic holder-on is operated from below by a third man being braced against the bottom of the ship or the next deck below.

For the second class, the hammer is simply held in the hands of the operator, said hammer having about a 4½ inches piston stroke, and as the die is cupped out to form the snap point, there is no tendency to slip off the point. The holding-on is done by a spring dolly bar, which I will explain later.

We now come to the third class, or shell rivets, which, in many respects, are the most important rivets in the ship, requiring the most careful workmanship and the best finish. Therefore it is a serious mistake for shipbuilders to attempt to drive shell rivets by pneumatic until they have established pneumatic riveting on all inside work, because the men operating the tools should be accustomed to handling the hammers before being put on this important part of the work. It is evident at the start that the varying thicknesses of plates, frame

flanges and liners, and especially the depths of countersink, render it impracticable to so gauge the length of rivet used that there will always be just enough metal to properly fill the countersink and finish the point, and that, therefore, as in hand riveting, a longer rivet must be used. After the point is beaten down and the surplus metal crowded off to one side, this surplus must be chipped off, and the point be finished up, rounded slightly, and any seams between the rivet and the plate driven together and closed. To do this a certain amount of freedom of motion must be allowed in the hammer, so that its axis may be inclined at a slight angle in any direction with the axis of the rivet itself. This result is attained by mounting a pneumatic hammer in a device having a universal movement attached to the end of a T bar, instead of its being immovably fastened to it. For bottom riveting there is a flat bar adapted so as to be mounted on the shell of a ship in any desired position (Plate VI.). This flat bar carries an adjustable support, connected, by means of a swivel joint, with a holder in which is mounted an adjustable frame bar; pivotally supporting at one end a pneumatic hammer, and at the other an adjustable distance piece.

At one setting a space of 14 feet by 16 feet square can be reached with the above device, and when it is necessary to move the device to another position the change can be effected in about ten minutes. A spring dolly bar is used for holding-on, thus dispensing with the costly method of a wood backing, necessary when a pneumatic holder-on was used, as was the case a few years ago, and an ordinary pneumatic chipping hammer being used to cut off the surplus metal before finally finishing. It is evident that the freedom of movement of the hammer can be secured in other ways, such as a ball and socket joint of large radius, but we have found the above device more satisfactory and all that can be desired.

For riveting the side shell plating the same device is used, with one exception, and this is as follows: there is a holder provided with a T-shaped slot, the sides of which form a bearing for the T-shaped frame bar, while allowing said bar to be moved from one position to another in said slot; and a friction spring and set screw, respectively adapted to bear against the bottom of said frame bar when the latter is in position in said slot, and to lock the frame bar in any desired position in said holder (Plate VII.).

The spring dolly bar now used is made of a piece of 3-inch pipe about 12 inches long, having at one end an ordinary cast-steel handle, while at the other there is a bushing, through which a set screw holds the cup or snap. Inside the pipe there is a piece of round iron, about 6 inches long, backed up by a spiral spring.

The quality of the work done by all these machines, both inside and outside the shell, is first-class in every respect, and far superior to hand work, seeing that a rivet driven by a pneumatic hammer has to be about 12 per cent. longer than a rivet driven by hand, which goes to prove that the hole is better filled when the work is done by pneumatic tools, and such is the unanimous opinion of the inspectors who have been and are on duty in the American shipyards.

That this is natural appears from several considerations. The rivets are closed down more rapidly and at a much higher temperature, and, as it is always easy to bring the axis of the hammer in line with the axis of the rivet, and, in fact, natural for the men to do so, the rivet is plugged at once by the first blows of the hammer, thoroughly filling the hole throughout before the point begins to form. The tendency of hand riveters to save labour, to form the point without thorough plugging, leaving a rivet which, though looking all right and passing the tester, is liable to loosen afterwards in service from the constant jar and vibration of the hull, is, therefore, avoided. In many confined places also, where only one man can strike, and the space for the swing of the hammer is confined to the frame spacing or less, hand rivets are very apt to be poorly driven, but it is evident that such considerations do not affect the machine, and that, if the pneumatic hammer can get to the rivet at all, it is as well put in as in the most open parts of the work.

As to the cost of pneumatic riveting, I submit the following figures, which are piece-work rates current in the States, also figures comparing them with the British piece-work hand rates. In making this comparison, I must call your attention to the fact that both day-work and piece-work rates in America are about 35 per cent. higher than in Great Britain. This is due chiefly to the cost of living being higher. So that the piece-work prices for pneumatic riveting in Great Britain should be one-third less than the prices paid in America.

The following was compiled from an actual test covering a period of three weeks at the Chicago plant of the American Shipbuilding Company:—

Distribution.	No. of Rivets.	Diameter of Rivets.	Machine Rate, Each.	Hand Rate, Each.
Keel (flat)	6,217	1 inch	$2\frac{1}{2}$ cents	$4\frac{1}{2}$ cents
Shell	21,628	$\frac{7}{8}$,,	$1\frac{3}{4}$,,	$3\frac{1}{2}$,,
Shell margin (bilge single line) ...	1,122	$\frac{7}{8}$,,	3 ,,	$4\frac{1}{2}$,,
Longitudinals open	24,632	$\frac{3}{4}$,,	$1\frac{1}{4}$,,	$2\frac{3}{4}$,,
C. V. K. brackets	3,197	$\frac{3}{4}$,,	1 ,,	$3\frac{1}{2}$,,
,, ,, ...	—	—	$1\frac{1}{4}$,,	$3\frac{1}{2}$,,
,, ,, ...	—	—	$1\frac{1}{2}$,,	$3\frac{1}{2}$,,
Longitudinals under tank ...	664	$\frac{3}{4}$,,	$1\frac{3}{4}$,,	$2\frac{3}{4}$,,
Longitudinals bars	2,989	$\frac{3}{4}$,,	$1\frac{1}{4}$,,	$2\frac{3}{4}$,,
Tank top stiffeners	1,129	$\frac{3}{4}$,,	$2\frac{1}{2}$,,	$3\frac{1}{2}$,,
Tank top margin	4,033	$\frac{3}{4}$,,	$1\frac{1}{2}$,,	$2\frac{3}{4}$,,
Tank top rider	3,209	$\frac{3}{4}$,,	$1\frac{1}{4}$,,	$2\frac{3}{4}$,,
Tank top lugs	1,520	$\frac{3}{4}$,,	$1\frac{3}{4}$,,	$3\frac{1}{2}$,,
Tank top	4,467	$\frac{3}{4}$,,	$1\frac{1}{4}$,,	$2\frac{3}{4}$,,
C. V. K. cross vertical keelson ...	12,723	$\frac{3}{4}$,,	1 ,,	3 ,,
Hold stringer	1,184	$\frac{3}{4}$,,	$1\frac{1}{2}$,,	3 ,,
Floors	123	$\frac{3}{4}$,,	$1\frac{1}{4}$,,	3 ,,
Floors (odd)	5	$\frac{3}{4}$,,	2 ,,	6 ,,
C. V. K. (odd)	38	$\frac{3}{4}$,,	2 ,,	6 ,,
Bulkheads	1,318	$\frac{3}{4}$,,	$1\frac{1}{4}$,,	5 ,,
,, ...	3,051	$\frac{3}{4}$,,	$1\frac{1}{4}$,,	$3\frac{1}{4}$,,
,, ...	231	$\frac{5}{8}$,,	$1\frac{1}{2}$,,	$2\frac{1}{2}$,,
Total	93,480			

Total cost of job by hand would have been	$2,986·87
Total cost of job by machine was	1,403·31
Saving of machine over hand work	$1,583·56
Average cost per rivet of hand work	·0319
Average cost per rivet of machine work	·0150
Average saving per rivet of machine over hand work ...	·0169

Average cost of machine rivetting was 47 per cent. of hand cost.

If the above 93,480 rivets had been driven by pneumatic tools in a vessel building in a British shipyard at piece-work rates one-third less than are paid in America, the result would be as given on the following page.

The amount that should be added to machine cost to cover interest, maintenance of plant, and operation of compressor, is about 15 per cent. of the gross earnings of the tools.

It is only fair to mention that, at the time the above test took place, about seven years ago, pneumatic tools were not as perfect as they are to-day, and their application to ship

The spring dolly bar now used is made of a piece of 3-inch pipe about 12 inches long, having at one end an ordinary cast-steel handle, while at the other there is a bushing, through which a set screw holds the cup or snap. Inside the pipe there is a piece of round iron, about 6 inches long, backed up by a spiral spring.

The quality of the work done by all these machines, both inside and outside the shell, is first-class in every respect, and far superior to hand work, seeing that a rivet driven by a pneumatic hammer has to be about 12 per cent. longer than a rivet driven by hand, which goes to prove that the hole is better filled when the work is done by pneumatic tools, and such is the unanimous opinion of the inspectors who have been and are on duty in the American shipyards.

That this is natural appears from several considerations. The rivets are closed down more rapidly and at a much higher temperature, and, as it is always easy to bring the axis of the hammer in line with the axis of the rivet, and, in fact, natural for the men to do so, the rivet is plugged at once by the first blows of the hammer, thoroughly filling the hole throughout before the point begins to form. The tendency of hand riveters to save labour, to form the point without thorough plugging, leaving a rivet which, though looking all right and passing the tester, is liable to loosen afterwards in service from the constant jar and vibration of the hull, is, therefore, avoided. In many confined places also, where only one man can strike, and the space for the swing of the hammer is confined to the frame spacing or less, hand rivets are very apt to be poorly driven, but it is evident that such considerations do not affect the machine, and that, if the pneumatic hammer can get to the rivet at all, it is as well put in as in the most open parts of the work.

As to the cost of pneumatic riveting, I submit the following figures, which are piece-work rates current in the States, also figures comparing them with the British piece-work hand rates. In making this comparison, I must call your attention to the fact that both day-work and piece-work rates in America are about 35 per cent. higher than in Great Britain. This is due chiefly to the cost of living being higher. So that the piece-work prices for pneumatic riveting in Great Britain should be one-third less than the prices paid in America.

The following was compiled from an actual test covering a period of three weeks at the Chicago plant of the American Shipbuilding Company: —

Distribution.	No. of Rivets.	Diameter of Rivets.	Machine Rate, Each.	Hand Rate, Each.
Keel (flat)	6,217	1 inch	2½ cents	4½ cents
Shell	21,628	⅞ ,,	1¾ ,,	3½ ,,
Shell margin (bilge single line) ...	1,122	⅞ ,,	3 ,,	4½ ,,
Longitudinals open	24,632	¾ ,,	1¼ ,,	2¾ ,,
C. V. K. brackets	3,197	¾ ,,	1 ,,	3½ ,,
,, ,, ...	—	—	1¼ ,,	3½ ,,
,, ,, ...	—	—	1½ ,,	3½ ,,
Longitudinals under tank ...	664	¾ ,,	1¾ ,,	2¾ ,,
Longitudinals bars	2,989	¾ ,,	1¼ ,,	2¾ ,,
Tank top stiffeners	1,129	¾ ,,	2½ ,,	3½ ,,
Tank top margin	4,033	¾ ,,	1½ ,,	2¾ ,,
Tank top rider	3,209	¾ ,,	1¼ ,,	2¾ ,,
Tank top lugs	1,520	¾ ,,	1¾ ,,	3½ ,,
Tank top	4,467	¾ ,,	1¼ ,,	2¾ ,,
C. V. K. cross vertical keelson ...	12,723	¾ ,,	1 ,,	3 ,,
Hold stringer	1,184	¾ ,,	1½ ,,	3 ,,
Floors	123	¾ ,,	1¼ ,,	3 ,,
Floors (odd)	5	¾ ,,	2 ,,	6 ,,
C. V. K. (odd)	38	¾ ,,	2 ,,	6 ,,
Bulkheads	1,318	¾ ,,	1¼ ,,	5 ,,
,, ...	3,051	¾ ,,	1¼ ,,	3¼ ,,
,, ...	231	⅝ ,,	1½ ,,	2½ ,,
Total	93,480			

Total cost of job by hand would have been	$2,986·87
Total cost of job by machine was	1,403·31
Saving of machine over hand work	$1,583·56
Average cost per rivet of hand work	·0319
Average cost per rivet of machine work	·0150
Average saving per rivet of machine over hand work ...	·0169

Average cost of machine rivetting was 47 per cent. of hand cost.

If the above 93,480 rivets had been driven by pneumatic tools in a vessel building in a British shipyard at piece-work rates one-third less than are paid in America, the result would be as given on the following page.

The amount that should be added to machine cost to cover interest, maintenance of plant, and operation of compressor, is about 15 per cent. of the gross earnings of the tools.

It is only fair to mention that, at the time the above test took place, about seven years ago, pneumatic tools were not as perfect as they are to-day, and their application to ship

construction has been very much simplified. For instance, when driving bulkheads and shell it was customary to use a pneumatic holder-on, which necessitated something to act as a backing for the tool, said backing having to be built up, which added considerably to the total cost of riveting, whereas now a spring dolly bar is used, which the holder-on holds in his hands; again, the shell device for holding the riveting hammer while driving the rivet has been very considerably improved, and can be removed from one position to another on the ship in less than one-fifth the time required to remove the old device.

Distribution.	No. of Rivets.	British Pneumatic. Price per 100.			British Pneumatic. Total Cost.			British Hand. Piece-work.			British Hand. Total Cost.		
			s.	d.	£	s	d.		s.	d	£	s.	d.
Keel (flat)	6,217	at	7	0	21	15	2	at	11	10	36	15	8
Shell	21,628	,,	5	0	54	1	5	,,	8	8	93	14	5
Tank margin	1,122	,,	8	4	4	13	6	,,	10	0	5	12	2
Longitudinals open	24,632	,,	3	6	43	2	1	,,	8	6	104	13	9
C. V. K. brackets	3,197	,,	3	6	5	11	10	,,	8	6	13	11	9
Longitudinals under tank ...	644	,,	5	0	1	13	2	,,	9	6	3	3	1
,, bars	2,989	,,	3	6	5	4	7	,,	9	6	14	3	11
Tank top stiffeners	1,129	,,	7	0	3	19	0	,,	10	0	5	12	11
Tank top margin	4,033	,,	4	2	8	8	0	,,	10	6	21	3	6
Tank top lugs	1,520	,,	5	0	3	16	0	,,	10	0	7	12	0
Tonk top rider	3,209	,,	3	6	5	12	4	,,	10	6	16	16	11
Tank top	4,467	,,	3	6	7	16	4	,,	10	6	23	8	0
C. V. K. vertical keelson ...	12,723	,,	2	10	18	0	6	,,	8	6	54	1	5
Hold stringer	1,184	,,	4	2	2	9	4	,,	8	6	5	0	8
Floors	123	,,	3	6	0	4	4	,,	8	6	0	10	5
Floors (odd)	5	,,	5	9	0	0	4	,,	11	6	0	0	7
C. V. K. (odd)	38	,,	5	9	0	2	2	,,	11	6	0	4	4
Bulkheads	3,051	,,	4	2	6	7	1	,,	7	0	10	13	7
					192	17	2				416	19	1

	£416	19	1
	192	17	2
Amount saved by machine over hand (British rates) ...	£224	1	11

In conclusion, I should like to say that, while visiting the various shipyards on the Clyde, one of the most prominent shipbuilders called my attention to the fact that since commencing to use pneumatic tools they have turned out 20 per cent. more tonnage, from the same building berths, than they did before. So there is not only a saving in the reduced price of work done by pneumatic tools, but also a great saving in time, which is a very important item to a shipbuilding company who are limited to space and have not sufficient berths to accommodate all the vessels they have on order.

Thus it will be seen that, while pneumatic tools are still only in their infancy, there is no limit to the advantages that shipbuilders and engineers can gain by their use in connection with shipbuilding and engineering.

In addition to the tools already mentioned, there are now on the market pneumatic hoists, rammers, moulding machines, wood-deck caulking machines, wood-deck planing machines, painting machines, and large hammers for blacksmith work.

DISCUSSION.

Mr. JAMES L. TWADDELL said—I have not come quite prepared to open the discussion, which I think ought to be a very important one to us all, and therefore I regret that it has not been left in better hands. Mr. Schofield's paper gives us a start in a subject that should be most interesting; in fact, the discussion should be more important really than the actual paper itself, as is the case in many such technical papers. I have followed very carefully the paper of Mr. Schofield, and there are one or two points I should like to take slight objection to.

For instance, while I quite admit that one feature of the use of the caulking tools in ship work is that bars, gunwale, tank, waterways and such like can be caulked without being planed or chipped, I am sorry to say we still have to order them of the full size. Mr. Schofield says "this allows the builder to order the said angles the same size as he would if they were not to be caulked." I take it that he means they may be ordered of the size after the chippings are taken off them; but we have to order the bars to the sizes required by Lloyds, or the classification society to which we are building. Ultimately, however, we may get something from Lloyds for that. At any rate the fact remains that the time saved in putting a bar direct into a ship without chipping or planing is obviously a distinct benefit, because you can put even a good thick bar right in position without any preparation whatever, and after it is riveted and made fast the caulking can be done by the pneumatic tool without any chipping or planing whatever.

In regard to the question of drilling, I notice that in the case where the tools were introduced first in America they found an immense advantage over the electric drills. That was practic-

ally my own experience. I do not know that we ever had actual results taken out in the same way as those given by Mr. Schofield, but we did find that the work was much more cheaply done by the pneumatic drill than by the electric, largely because more work could be got through in a given time and they were much more portable. The percentage mentioned in the paper, 60 per cent. off the piece-work hand rate, is fairly general. In some cases, indeed, we could get more than that. In cases of drilling and tapping, we have tools to drill the hole at the point, and farther up the tool is the tap, and with one operation we drill, tap, and withdraw, the machine leaving a perfectly tapped hole. In many instances holes which used to cost us something like 2s. 6d. a dozen we get done for 6d., and the men can make as much money as they used to do by hand.

But instead of absolutely discarding electric drills we have rather improved on Mr. Schofield. We had a number of electric drills with magnet attachment for holding down—two cylindrical magnets and the electric drill in between. These were rather heavy to move about, besides which we had to have a boy attending on the man. They were useful for large holes for timber heads and deck fittings, but since we began to use the pneumatic drill, instead of absolutely discarding these, we have made a combination and retained only the electric magnets and put in a pneumatic drill instead of the electric drill. We find it easily portable, and it does the work splendidly, because there is no rig up. We have found that combination of very great advantage.

In regard to the question of riveting, Mr. Schofield says that "a very short experience with compression riveters showed that their great weight—reaching over 2,500 lbs. for a six-foot gap—interfered too much with facility of handling to make them either useful or economical." I scarcely agree with that, because we discarded the old style of hydraulic riveting entirely for the frame work, double-bottom floors and knees, and the like. We always put them on skids and rivet them preparatory to erecting them. Formerly, that was done by hydraulic riveting. Now we have introduced the pneumatic; the riveter we use is the De Bergue hammer. There is a lever on the hammer which multiplies the power, and we find it much superior in many ways to the hydraulic, as it is not affected by frost. We have riveted with this machine 1¼ inch rivets and made a first-class job.

Mr. Twaddell being here to-night. Mr. Twaddell has probably had as much, if not more, than any shipbuilder to do with the introduction of pneumatic tools in shipyards in England. Mr. Twaddell has gone fully into the details of the paper, and I am sure all who have had anything to do with the tools will agree with his criticism, but I am sure it will be more or less a satisfaction to me to know that Mr. Schofield has dealt so very much in detail with pneumatic riveting. We all know that, though for some years past in our shipyards we have met with a great amount of success regarding caulking and drilling, we have certainly had great difficulties regarding riveting. Only a few days ago I was talking to an Admiralty official, and I know in one of the dockyards they have got to a very successful stage in all grades of riveting, even the shell work. Certainly private shipbuilders have not yet got to that stage, but we hope to reach it within the next few years. So that, in the consideration of piece rates for boilermakers, we have not been able to fix any percentage to be taken off riveting, though we struck a moderate rate off caulking, drilling, etc. It is most interesting for us to see what they are doing in American yards. What they have been doing in America in the past we may at least hope to do in the future. I have seen Mr. Schofield's plant, as well as other plants, and I thoroughly endorse everything he says. There is no doubt pneumatic tools have come to stay, whether liked or disliked. Nor is there any doubt that there is a great future before them, and I think we as an Institution are very much indebted to Mr. Schofield for the able paper he has put before us.

The discussion was adjourned.

The meeting then dissolved.

[illegible] with the ordinary style of hand- [illegible] very fairly indeed—that in [illegible] easily, but in many [illegible] it. In regard to [illegible] emanated from our [illegible] better machine [illegible] clears its own [illegible] on the deck. As compared [illegible] With the pneu- [illegible] like a billiard table, [illegible] unless you go [illegible]

[illegible] distributing ground [illegible] covering the [illegible] great deal of hand [illegible] it with the [illegible] rough surface [illegible] It is a simple [illegible]

[illegible] compressed-air can [illegible] we have had lying at [illegible] machinery on board, [illegible] pneumatic power to [illegible] compressed-air and [illegible] we have also run an [illegible] show the [illegible] In fact, the [illegible] it has been [illegible] it up now it has [illegible] pneumatic plant in ship- [illegible] things that has happened during [illegible] years in shipbuilding. It is a matter of [illegible] people have only got to see it to be [illegible] I have only to thank Mr. Schofield [illegible] may [illegible]

Mr. Twaddell being here to-night. Mr. Twaddell has probably had as much, if not more, than any shipbuilder to do with the introduction of pneumatic tools in shipyards in England. Mr. Twaddell has gone fully into the details of the paper, and I am sure all who have had anything to do with the tools will agree with his criticism, but I am sure it will be more or less a satisfaction to me to know that Mr. Schofield has dealt so very much in detail with pneumatic riveting. We all know that, though for some years past in our shipyards we have met with a great amount of success regarding caulking and drilling, we have certainly had great difficulties regarding riveting. Only a few days ago I was talking to an Admiralty official, and I know in one of the dockyards they have got to a very successful stage in all grades of riveting, even the shell work. Certainly private shipbuilders have not yet got to that stage, but we hope to reach it within the next few years. So that, in the consideration of piece rates for boilermakers, we have not been able to fix any percentage to be taken off riveting, though we struck a moderate rate off caulking, drilling, etc. It is most interesting for us to see what they are doing in American yards. What they have been doing in America in the past we may at least hope to do in the future. I have seen Mr. Schofield's plant, as well as other plants, and I thoroughly endorse everything he says. There is no doubt pneumatic tools have come to stay, whether liked or disliked. Nor is there any doubt that there is a great future before them, and I think we as an Institution are very much indebted to Mr. Schofield for the able paper he has put before us.

The discussion was adjourned.

The meeting then dissolved.

excellent work. As compared with the ordinary style of hand-caulking we find—to put the case very fairly indeed—that in the hands of one man it does the work of four easily, but in many cases we have had far more than that out of it. In regard to the wood deck planing machine, that also emanated from our works, and it is a complete success. It is a much better machine than the electrical one, and the exhaust air clears its own track by blowing away the chips from the deck. As compared with hand-work there is no comparison at all. With the pneumatic machine you get a surface almost like a billiard table, whereas you get no regularity with hand-planing unless you go over it very often.

We have also used pneumatic tools for distributing ground cork on the surfaces of war vessels, and also in covering the cork surfaces with paint, which takes a very great deal of hand labour when done with the brush. By distributing it with the compressed-air it puts the paint right into the rough surface with one coat, and does not use any more paint. It is a simple contrivance, something like an ejector.

We have found in many instances that compressed-air can be used instead of steam. For instance, we have had lying at our finishing jetty a vessel with auxiliary machinery on board, but no steam near. We have applied the pneumatic power to auxiliary pumps, simply coupling up the compressed-air and using it instead of steam. By this means we have also run an electrical plant all night. I only mention this to show the various uses that compressed-air can be put to. In fact, the more I see of its usefulness the more I am surprised it has been so long in coming, and that so few have taken it up now it has come. I consider the adoption of pneumatic plant in shipbuilding yards one of the finest things that has happened during the last ten or fifteen years in shipbuilding. It is a matter of such wide interest that people have only got to see it to be convinced of its utility. I have only to thank Mr. Schofield for his excellent paper and to express the hope that it may elicit further opinions from our members.

Mr. G. J. Carter said—I think our Institution is certainly to be congratulated, not only on the very excellent paper which Mr. Schofield has put before us, but also on the fact of our friend

Mr. Twaddell being here to-night. Mr. Twaddell has probably had as much, if not more, than any shipbuilder to do with the introduction of pneumatic tools in shipyards in England. Mr. Twaddell has gone fully into the details of the paper, and I am sure all who have had anything to do with the tools will agree with his criticism, but I am sure it will be more or less a satisfaction to me to know that Mr. Schofield has dealt so very much in detail with pneumatic riveting. We all know that, though for some years past in our shipyards we have met with a great amount of success regarding caulking and drilling, we have certainly had great difficulties regarding riveting. Only a few days ago I was talking to an Admiralty official, and I know in one of the dockyards they have got to a very successful stage in all grades of riveting, even the shell work. Certainly private shipbuilders have not yet got to that stage, but we hope to reach it within the next few years. So that, in the consideration of piece rates for boilermakers, we have not been able to fix any percentage to be taken off riveting, though we struck a moderate rate off caulking, drilling, etc. It is most interesting for us to see what they are doing in American yards. What they have been doing in America in the past we may at least hope to do in the future. I have seen Mr. Schofield's plant, as well as other plants, and I thoroughly endorse everything he says. There is no doubt pneumatic tools have come to stay, whether liked or disliked. Nor is there any doubt that there is a great future before them, and I think we as an Institution are very much indebted to Mr. Schofield for the able paper he has put before us.

The discussion was adjourned.

The meeting then dissolved.

NORTH-EAST COAST INSTITUTION OF ENGINEERS AND SHIPBUILDERS.

INSTITUTION DINNER.

The Institution dinner of the 22nd Session took place in the Assembly Rooms, Westgate Road, Newcastle-upon-Tyne, on Friday, 1st December, 1905. The chair was occupied by the President, the Right Hon. Lord Armstrong, M.A., D.C.L., J.P., who was supported by the following gentlemen:—

Past-Presidents—Ald. William Boyd (the first President of the Institution), Colonel H. F. Swan, C.B., and Henry Withy, Esq., J.P.

Vice-Presidents—Messrs. W. C. Borrowman, W. H. Dugdale, Summers Hunter, James Marr, R. H. Muir, J. M. Rennoldson, W. G. Spence and Professor R. L. Weighton.

Members of Council—Messrs. David Andrew, C. A. Bushell, Alfred Harrison, D. R. Macdonald, N. E. Robson, W. Swinney, H. Walker, R. Wallis, G. D. Weir and Col. R. Saxton White.

Mr. G. E. Macarthy, honorary treasurer, and Mr. John Duckitt, secretary.

Guests—The Mayor of Newcastle (Ald. Joseph Baxter Ellis), the Sheriff of Newcastle (Councillor Johnstone Wallace), Sir Walter R. Plummer, M.P., George Renwick, Esq., M.P., James Walker, Esq., C.E. (President of the Newcastle-upon-Tyne Association of the Students of the Institution of Civil Engineers), J. Foster King, Esq. (Chief Surveyor to the British Corporation Registry), M. Walton Brown, Esq. (Secretary of the Mining Institute).

Members of the Institution to the number of about 150 sat down.

The PRESIDENT, rising at the conclusion of the dinner, said —I rise to propose the toast that we always drink first on these occasions, that of "His Gracious Majesty the King." As a nation we feel a deep sense of gratitude to His Majesty for the wise and tactful way in which he has represented the nation, and there

is no doubt that the increased *prestige* that we enjoy throughout the civilised world we owe in no small measure to the wonderful diplomacy that the King has always shown. I trust His Majesty may long be spared to render similar services to the nation in the future to those that he has rendered in the past.

The toast was loyally honoured.

The PRESIDENT said—I have now to give you the toast of "Queen Alexandra, the Prince and Princess of Wales, and the other members of the Royal Family." I am sure you will agree with me that this is a very fitting occasion to propose this toast, as to-day is the birthday of Her Majesty the Queen. I am sure you will all join me in wishing Her Majesty "many happy returns of the day." Her Majesty, ever since she came to this country, has been loved and honoured by the people, and she has always shown a very warm sympathy with those who are less well off than herself. She has only recently shown another proof of this sympathy with the nation by the steps she has taken on behalf of the unemployed, and I am sure that this touch of sympathy which Her Majesty has shown will have a very good effect on the whole nation. Then we also wish the Prince and Princess of Wales every prosperity during the historic journey on which they are at present engaged. The sympathy that the Royal Family have with the people of this country has always been common knowledge, and I feel confident that sympathy is earnestly reciprocated by every loyal subject. On this occasion I think it is a very fitting thing to allude to a recent event which is a very gratifying one to the people of this country—that their Majesties' daughter has now, in company with her husband, Prince Charles of Denmark—who is no stranger to this city—ascended the Throne of Norway. I am sure that no people have been more pleased at this happy event than have the people of this country, and we all unite in wishing them a very happy and prosperous reign, as I think we all agree they both most heartily deserve. I beg to give you the toast of "Queen Alexandra, the Prince and Princess of Wales, and the other members of the Royal Family."

This toast was also loyally honoured.

The SECRETARY said he had received a number of letters and telegrams from gentlemen—invited guests and members—who expressed their regret at being unable to be present that evening. Their names were as follows:—

Invited Guests—Sir Andrew Noble, Bart., K.C.B., Sir Theodore Doxford, M.P., Sir William White, Col. Sir Philip Watts (Admiralty), Sir John Durston (Admiralty), Sir Alexander Binnie (President of the Institution of Civil Engineers), the Right Hon. the Earl of Glasgow (President of the Institution of Naval Architects), the President of the Institution of Mechanical Engineers, the President and Secretary of the Institution of Engineers and Shipbuilders in Scotland, the President of the Institute of Mining Engineers, Sir Marcus Samuel (President of the Institute of Marine Engineers), H. J. Cornish, Esq. (Lloyd's Register of Shipping), J. T. Milton, Esq. (Lloyd's Register of Shipping), John Gravell, Esq. (Bureau Veritas Registry of Shipping), Sir Christopher Furness, M.P., Sir Isambard Owen, M.A., M.D. (Principal of Armstrong College).

Members—Sir B. C. Browne (Past-President), Mr. John Tweedy (Past-President), Mr. J. R. Fothergill (Vice-President), and Mr. James Robinson (Secretary of the Federated Society of Employers).

Colonel H. F. SWAN, C.B., in proposing the toast of "The Houses of Parliament," said—The toast that has been put into my hands is one of great importance, especially at this particular time, as, according to all appearances, we are very shortly to have an election. In this country we are happy in having a Constitution which provides us with two branches of the Legislature—one that is permanent, and the other elected by the people, and these two have been found to work together in such harmony that this country has enjoyed many years of peace and happiness; and I think nothing could more confirm our good opinion of our Constitution than to look round and see what is going on at the present time in many countries abroad. I shall not detain you by eulogising the House of Lords or the House of Commons. Each in its own sphere has shown it is deserving of our confidence. Both Houses give their services in promoting our interests. We are fortunate in having here to-night representatives of both Houses. We have our noble President who represents the Upper

House. We have also the members for this city. I do not know about what they will talk to you, but in view of the great discussions that have been going on on the fiscal question I have no doubt they will have something to say on that subject. We as an Institution represent industries which produce ships and engines and various things of that kind, and are dependent for orders on our relations with foreigners to a large extent, and I think these gentlemen will have some views as to what will be the best policy to adopt in carrying on our business in relation to imports and exports. I shall not detain you further, but ask you to drink the health of the House of Lords and the House of Commons, coupling with the toast the names of the President and Mr. George Renwick.

The toast was heartily drunk.

The PRESIDENT, responding, said—I must thank you very heartily for the kind way in which you have proposed and drunk "The Houses of Parliament," and coupled my name therewith. I feel I am in rather a favourable position to-night compared with my friends Sir Walter Plummer and Mr. George Renwick, because I have not got to face the possibility, though it is not in their case the probability, of being turned out. I belong to that House which, fortunately for itself, goes on for ever, although in many quarters, from people who would like to change and destroy our ancient and glorious Constitution, one comes in for a certain amount of abuse, and one hears cries of "Down with the House of Lords." I am glad to think that this is not the feeling of members of this Institution, and that you still think that a member of the House of Lords is fit to be your President. I feel that, notwithstanding the remarks that are made adverse to the House of Lords, the country recognises that the House of Lords is an integral part of the Constitution, and that the members of the House of Lords are as closely, and perhaps more closely, associated with the commerce, and the progress, and the prosperity of this country than perhaps any other class; and I am sure we only have to look round to see that the House of Lords has representatives that are distinguished in every branch of industry in the civilised world. We have members of the House of Lords distinguished in commerce, in art, in litera-

ture, and in philanthropy, and we constantly find the House of Lords doing its best to uphold the greatness of our country. As long as this continues I feel that the House of Lords will continue to retain the affection and regard of the people of this country. This is not the first time that I have had to return thanks for the House of Lords, and I have occasionally twitted my friends in the other House on the difference of procedure in the two Houses —how the House of Lords confines itself to short speeches, while the House of Commons makes long speeches; and how the House of Lords goes home in good time, while the House of Commons spends the night in delivering speeches. I remember on one occasion I referred to this in my speech, and remarked how the House of Lords always went home to bed in good time and got plenty of beauty sleep, and a distinguished member of the Commons who followed me said that he hoped the House of Lords did not go to bed as soon as they got home, because in that case they would always be in bed at seven o'clock at the latest. In reference to the House of Lords, as well as to the other House, I can only say that I hope it will always be the ambition of Englishmen to serve their country in one or other of the Houses of Parliament. I beg to thank you once more very heartily for the kind way in which you have associated my name with this toast.

Mr. George Renwick, M.P., also responded. He said—I thank you for associating my name with this most important toast. We have heard from the noble lord in the chair that they in the Upper House have at the present moment a great advantage over members of the Lower Chamber, because they have no dread of an approaching election, or of what may happen; but we less fortunate members of the House of Commons cannot but recognise that there is an election imminent, and none of us know what may happen. Colonel Swan told us possibly some of us might be turned out; but I venture to say that if I, for one moment accepted the hint that he gave, to make a speech upon the fiscal question to-night, it is a certainty that I should be turned out. We certainly have had sufficient "fiscalitis" in this city within the last few days to last us for some time, therefore I am going to spare you any remarks on that subject to-night. I do envy your House, my lord, on many

occasions. You tell us you go home early and get to bed early. Sometimes we in the House of Commons do not go home and do not get to bed. We stay all night in the House. They in the Upper House make short speeches. We make long speeches. But it also happens where the long speeches are made little work is done, and where the short speeches are made—in the House of Lords—they do an enormous amount of work in a very short time, with this result: that we in the House of Commons complain of having too much work to do, while the members of the Upper House complain that they have too little. I am sure we would very gladly give them a little of our work, because we know it would be done efficiently. On a previous occasion, in responding to this important toast, I quoted a few remarks that had been made by Lord Hugh Cecil, himself the son of a distinguished member of the Upper House, and these remarks are rather apropos on the present occasion, because he tells us he "watched with hungry eyes, from the Bar of that Assembly, those privileged mortals, indifferent to Whips, indifferent to constituencies, going on their august path straight to the subject that happened to interest them, indifferent altogether to the exigencies of party tactics which pressed so hardly on their brethren of the Lower House." When we read words like these we do envy the noble lords. We have the party Whips to obey, and we also have to pay strict attention to the wishes of our constituents. Therefore, my lord, you have a great advantage over us in the political position you occupy.

But with regard to the House of Commons I want to say this: I do deprecate what we so often read of and hear at the present time, and that is an attempt to belittle the House of Commons. I do not wish for a moment to see the House of Commons belittled or degraded. Remember it is the House of the representatives of the people, and if it is acknowledged that House has failed to do its duty then it is acknowledged that government by the people is a failure. We do not want that. There is work for the House of Lords to do, and there is important work for the House of Commons to do, and I agree with the noble lord when he said it ought to be an honour to, and the ambition of all men, to represent their country in the House of Commons, and I think my colleague—(Sir Walter Plummer)—will agree with me when I say that we both acknowledge that one of the greatest honours

that has ever been conferred upon us was by our fellow citizens when they returned us as their representatives to the House of Commons. Whether we are returned again or not remains to be seen; but we still appeal with the greatest confidence to our fellow-citizens in this respect, by saying that while we have been honoured by being returned as their representatives, we have done our best for the interests of our native city. I thank you very much for the kind and cordial way in which you have proposed and drunk the toast.

Sir WALTER PLUMMER, M.P., said—I rise to submit to you what is, of course, the toast of the evening. It is that of "The North-East Coast Institution of Engineers and Shipbuilders." I need not say I greatly appreciate the honour on this, the first time that I have had the good fortune to be able to accept the invitation, which has been extended to me on previous occasions, to attend this banquet, of being asked to propose the toast of the evening, and I appreciate the honour all the more when I remember that we celebrate to-night the coming-of-age of this Institution, because it is just twenty-one years since the first general meeting was held in this city of Newcastle. And when we think of how your Institution is flourishing, with, I think, more than 1,100 members at the present time, and when we cast our minds back to the day of small things, then I think you are to be congratulated upon the wonderful success which has attended this Association. It must indeed be a great satisfaction to men like Mr. William Boyd, and Mr. Spence and others who watched over it with great care in its infancy, to find what a flourishing child they have been responsible for, and how satisfactory it is on this coming-of-age occasion to find this North-East Coast Institution of Engineers and Shipbuilders in so flourishing a condition. Its Past-Presidents, I observe, have numbered some of the most representative men in the two allied industries on the three rivers of Tyne, Wear and Tees; and we have to-day, as our President this evening, and as the President of your Association, one whose name is associated with the largest works in the North of England, and, if not the largest, at any rate one of the largest works in the whole world, and who bears a name that will be remembered for many generations not merely in the North of England but throughout the country.

After all, when we think of the district which is comprised in the sphere of operations of this Institution, I do not think we need marvel at the great progress which it has made, because there probably could not be a more suitable district for the development of such an Association as this, as the North-East Coast and the three rivers I have named. A district which, in the past, has produced its Stephensons and its Armstrongs, and in which to-day we are proud of our Parsons, who, I regret, is not able to be present with us, must, I think, be a very fitting developing ground for such an Association as this. Indeed, when we remember all the wonderful output of the three North-East Coast rivers—the Tyne, the Wear and the Tees—when we think of that wonderful output in steel, in iron, in ships, in railways, in locomotives, and in many other things, I do not think we would be incorrect if we were to say that the output of this North-East Coast has, in fact, placed a girdle round the world both by land and sea.

Though, as we see to-night, my lord, the Institution of which you are the honoured President has its social side, its real object, I think we will all agree, is of educational character. "The advancement of the science and practice of engineering and shipbuilding, the interchange of ideas and information by meetings and debates," were the original objects for which this Association was formed, and have, in a greater or lesser degree—nay, I think I may say in much the greater degree—continued to be the objects right down to the present time. I have had an opportunity of perusing some volumes of the *Proceedings* of this Institution, and I have been surprised, as one not conversant with these things, at the amount of technical knowledge and information conveyed in the papers read before it in connection with these two great industries of engineering and shipbuilding. You will not expect a layman to comment upon the technical and scientific value of this Institution, but it does not require an expert to enlarge upon or to realize the importance of the two great industries—shipbuilding and engineering—which are associated with this particular society. We know, of course, that upon these two great industries the prosperity of this North-East portion of England very largely depends; and if we may say—as I think we are entitled to say—that this Institution contributes largely to the progressive advancement

of these two industries, then it is only logical to assert that upon this Institution not a little of the prosperity of this particular district depends. We all know of the great artist who, upon being asked by one who marvelled at the wonderful results he achieved, "what he mixed his colours with," replied "Brains, sir, only brains," and it is, I think, your object to bring to the front the best brains of the younger generation of your professions, and so to take care that not merely your Institution, but the whole of this portion of England, benefits by obtaining the greatest results from the latest scientific inventions. I do not stop to speak of the great vessels of war which have been constructed on and sent forth from the rivers of the North-East Coast, but we all know that "peace hath her victories, no less renowned than war"; and I do not hesitate to state that if it was possible to make a comparison between the victories that have been achieved in the direction of peace by the wonderful engineering facilities and discoveries of the period covered by the existence of your Institution, and by the wonderful difficulties which have been overcome by those engineering and other inventions, it would be found that the victories of peace have eclipsed the victories of war.

I have referred to the importance to this district of the industries of engineering and shipbuilding, and certainly no one in this room will gainsay that fact. If you take away the shipyards and engineering works of the three northern rivers, what, indeed, remains? Something, of course, does remain; but we would indeed then be but a shadow of our former selves, and it is of vital importance, not merely to your Institution, but to the whole of this district, that those industries should be maintained upon what I will term, for want of a better word, progressive lines—that you should, by the educational facilities which are offered to the younger members of those engaged in these industries, be able to profit by the inventions which are coming with the twentieth, as they have come with the nineteenth century, and that the benefit of those inventions should not merely come to yourselves as members of this Institution, or to the Institution itself, but—as I have no doubt they will—that they should come to the whole district and the whole community, not merely in the North, but of this whole country.

I now give you with great pleasure the toast which I have

the honour to propose, "The North-East Coast Institution of Engineers and Shipbuilders," coupled with the name of the President, Lord Armstrong.

The toast was drunk with great cordiality.

The PRESIDENT, replying, said—I must thank you all very much indeed for the exceedingly kind way in which you have received this toast, and Sir Walter Plummer in particular for the most interesting speech that he has made in proposing it. I am glad to think that I should have been President of this Institution on its attaining its twenty-first birthday. I feel almost as if I were attaining my own twenty-first birthday in being President of the Institution on this occasion. I am sure this must be a proud day for Mr. Boyd and Mr. Spence, whom I am so glad to think we have with us to-day, to see the Institution which they founded and spent so much time in building up reach its twenty-first birthday in such a fine and flourishing condition. When we think that this Institution, started by a few enthusiastic young men joining together with the determination to benefit themselves and to increase their knowledge of the science of engineering and shipbuilding and that it has gradually grown up until its members are counted by hundreds, we are glad to know that the Institution occupies a very prominent place in maintaining and helping on the industries of shipbuilding and engineering.

Sir Walter Plummer has spoken of the Tyne and the Tees and the Wear, and I venture to think there are no three rivers in the whole world which have shown such immense progress during the life of this Institution as have those rivers. Take our own river. Thirty years ago the Tyne was quite what one might call a second-class river. You could ford the Tyne at low water about the High Level Bridge, but now it has become a river of the first importance, and ships of the greatest tonnage now easily go up and down its waters. The commerce of all nations finds it way to Newcastle, and Newcastle has become through it one of the most important commercial centres of this country.

Then with reference to the Institution, I feel that not only by the most interesting educational papers read at its meetings, but by the manner in which it has set itself the task of guiding

and directing the engineering education of this district, the Institution has done a very great service both to the engineering and shipbuilding industries. Sir Walter Plummer has spoken about the ships of war which have gone out from our river here to render good accounts of themselves in other places. Well, I hope that in the future other nations will come to the Tyne to purchase ships of war from us, because in the building of these ships of war there comes great prosperity to the people that dwell on the banks of the Tyne; and I hope also commercial shipbuilding may flourish in the future more than it perhaps has done during the last few years. I am glad to think that there are signs of an improvement in shipbuilding on the Tyne, and I trust that these signs may become an accomplished fact before many months have passed, and that all the shipbuilding yards of the Tyne may find themselves profitably and fully engaged.

I will not detain you with any further remarks, except to express the earnest wish that the Institution may go on and flourish in the future as it has done in the past, that it may continue to be the foster-mother of the industries of shipbuilding and engineering in our midst, and that young men who start in these careers may see it is to their manifest advantage to become members of this Institution, and that, having become members of the Institution, they will do their best by their industry and their talents to bring fame to the Institution of which they are members.

Ald. William Boyd (Past-President) proposed the toast of "Kindred Institutions." He said—I am sure that the present occasion cannot fail to be one of very great interest to all who are seated round this hospitable board to-night, and, if I may be excused for saying so, to none is it more interesting and more wonderful than to myself, and I couple with my own name that of my friends, Mr. C. W. Hutchinson, of Elswick, who was the moving spirit in the formation of the Institution in 1884, and Mr. Spence, who was the first secretary of the Institution, who, like myself, must wonder at and be pleased with the progress made since that date. The growth of the Institution has been dwelt upon by previous speakers, and I have no desire to labour the question any further to-night; but I think all of us who are members at the present moment

may congratulate ourselves that on the foundations which were laid one-and-twenty years ago has been built up the goodly structure of which we are all members. I am pleased to be able to remind you that, with one exception, all those who have occupied the Presidential chair since 1884 are still with us, the exception being that of my old friend Mr. F. C. Marshall, who passed away in 1903, and whose services to the Institution in its early days cannot be too highly estimated and must not be forgotten. It may possibly be regretted that the attention to the daily work of the Institution which these gentlemen are now able to render is not *in evidence* to the same extent as formerly. I regretfully acknowledge that it is so in my own case, but as years go by this is inevitable, and I think there is this consolation, that the work and the success of an Institution of this kind belongs to the young men, and it is to the young men to whom we have to look to carry it on to its ultimate and continued prosperity. It has been a matter of great satisfaction and gratification to me to find that the very last paper that has been read before the Institution—that by Mr. Schofield on pneumatic riveters and pneumatic tools generally —is exactly the class of paper recording and dealing with practical work which I endeavoured to recommend to the Institution many years ago, and I sincerely hope that this line of paper will be followed by those who, as I have said, have the carrying on of the Institution in their hands—the younger members of the profession on the North-East Coast.

The toast which I have to propose to you is that of "Kindred Institutions." Twenty-one years ago we were not numbered in the list of societies: we did not exist, but the lapse of years has made a difference, and I think it may be said that we now occupy no ignoble position amongst the scientific societies of this country, whether in regard to the number of our members or to the character of the papers which have been put before us from time to time during these many years. And it is only right, and this seems to me to be a fitting opportunity, to put on record how warmly and heartily we have been received into the family of scientific societies by those Institutions whose foundation dates much farther back than our own. From the Institution of Civil Engineers (which was founded in 1818, and is therefore nearly ninety years old), from the Institution of

Mechanical Engineers, from the Institution of Naval Architects, from the Institution of Electrical Engineers, and from many others whom I need not recall to you, this Institution has always received a hearty welcome, and support in all that we have done, and I feel that that gives the keynote to the toast which I have the honour to propose to you to-night. My friend Mr. Walker is the representative of the Institution of Civil Engineers which, as I said before, is, I believe, the oldest Institution of its kind in Great Britain, and of late years has been widening its borders, and receiving amongst its members men who in the old days, I suppose, would not have been admitted; but the point I wish to mention to you, by way of commending this toast to your notice, is the friendly way, and the sympathetic way, in which this young Institution, for it is still young, has been received by an Institution of a very much earlier date, and I am quite of opinion that much of the success of this Institution has been due to that co-operation and that friendly desire to promote our welfare and to help us on in the line we had undertaken in this district. I will not say more than to ask you to drink the toast, coupled with the name of Mr. Walker, who is the President of the Newcastle-upon-Tyne Association of the Students of the Institution of Civil Engineers. I am quite sure that Mr. Walker's presence here to-night will be greatly appreciated, and perhaps he will excuse me in saying this one word more: how much I have personally felt, and how entirely I appreciate, the way in which I have been received here this evening as one of those who had something to do with the formation of this society a good many years ago.

The toast was heartily honoured.

Mr. James Walker, C.E., responded. He said—After the very eloquent and interesting speech which we have heard from Alderman Boyd, and in view of the no doubt equally eloquent ones that are to come, I do not propose to occupy your time for more than a very few minutes. I have been asked to return thanks for the "Kindred Institutions," and I do so with much pleasure. I presume I have been asked to reply to this toast as I have this year the honour to be President of the Newcastle-upon-Tyne Association of the students of the Institution of Civil

Engineers. I think it may be fairly said that the Institution of Civil Engineers is a sort of elder brother of your Institution, and I am sure we have very many things in common. Both Institutions were founded for the advancement of mechanical science; both Institutions hold periodical meetings at which papers are read and discussed; and both Institutions have done a vast amount of good in forwarding the interests and the professional attainments of all their members, many of whom, by-the-bye, as has been said, belong to both Institutions. As I was coming here to-night I was turning over in my mind what Tyneside would be like without engineers and shipbuilders, and it appears to me in this way: Without engineers the Tyne would not be a navigable river at all in the modern meaning of a navigable river. It would be nothing but a series of sandbanks from one end to the other. Without shipbuilders there would be no ships to float on it. So it comes to this: that Tyneside, which we all know now as a teeming hive of industry, would be, except for us—that is all of us—nothing but a howling wilderness. I think this is a very comforting and flattering conclusion for us all to take home with us to-night. I beg to return my most hearty thanks to Alderman Boyd for the very kind way in which he has proposed this toast, and to offer you my sincere acknowledgments for the very cordial manner in which it has been received by you all.

Col. R. Saxton White gave the toast of "Our Guests." He said—I am quite sure that you all much regret the absence of gentlemen whom we had hoped to have with us as our guests to-night. Sir Christopher Furness is one of our masters of enterprise and fills a very high place in the industries of the North-East Coast. We also much regret the absence of Sir Isambard Owen. The North-East Coast Institution knows the interest he takes, and the great endeavour he is making to furnish the Armstrong College with the educational equipment that is necessary, and we hoped to have given him a cheering word from this Institution in his present endeavour to raise a fully endowed Chair of Naval Architecture and for a fuller equipment of the Engineering Chair. We regret Sir Isambard's absence from us to-night. We are favoured with the company of the Mayor and Sheriff of the city of Newcastle. They repre-

sent popular government in the city, and although we may not always be at one with them in their undertakings, there is no question that whatever they do, is done in the best interests of the city, and we can only wish them all success in their endeavours. The city of Newcastle is no mean city, and it is a great honour to be selected by the citizens to fill the high offices of the chief magistrate and sheriff of the city. We have had the privilege of listening to our friend Mr. Walker, and although the line of jurisdiction between the Corporation of Newcastle and the Tyne Commissioners is somewhat fine, Mr. Walker well represents the Tyne Commissioners, without whose great work during the last fifty or sixty years our vocation here would have been of little value, for the reason that we should have had no river to launch our ships into. We, therefore, as naval architects and shipbuilders, owe a deep debt of gratitude to the Tyne Commission for their great work, carried out under the guidance of their engineers, not the least capable of whom we have with us this evening as our guest in the person of Mr. Walker. There is another guest whom we are glad to welcome—Mr. Walton Brown, the secretary of the Mining Institute. We have also, from Glasgow, Mr. Foster King of the British Corporation, and there are many others present with us to-night who will excuse me if their names are not mentioned; but we are always very glad to welcome our guests from near or far. I have the honour to propose the toast of "Our Guests," and to couple with it the names of the Mayor and Sheriff, and Mr. Walton Brown.

The Mayor of Newcastle, responding, said—I am sure no words of mine can fully express my sorrow, as well as yours, at the absence of so many of those gentlemen whose names have been referred to, and who ought, like myself, to have enjoyed your hospitality at this table to-night. I also feel myself somewhat in a critical position in having to respond for so many gentlemen, especially those connected with your professions of engineering and shipbuilding. But there is one thing I can do, and that is, I do appreciate thoroughly the very kind words that have been expressed by the proposer of this toast with respect to the members of that Council that I have the honour to preside over for the third time. Your difficulties and ours are similar; our interests are identical. The prosperity of the

district and the welfare of the people depend to a much larger extent than we can possibly realize upon the action that you and we may take—you with your engineering and shipbuilding works, and we in connection with the government of a great and important city like Newcastle. But you will allow me to congratulate you upon your immediate prospects. It must be a great satisfaction to every one of you, whether occupied in these two important industries or as consulting engineers, to know and to think that there is in the immediate future a very bright prospect for trade.

His worship then referred to municipal affairs, dealing largely with the tramways of the city, and concluded by thanking them for their kindness in asking him to their hospitable board. He had appreciated it very highly, and he was deeply indebted to the proposer of the toast for the kind expressions he had used with respect to himself and his colleagues.

The SHERIFF OF NEWCASTLE, in response, said—I feel it is a great honour to be one of your guests, because the industries you represent are the backbone not only of Tyneside, but of the North-East Coast. We rejoice with you in the prosperity which is attending your work, and which is likely to be before you for some little time to come. We hope it may increase, and that success may attend you throughout the coming year. We are hoping for a visit of the Japanese Fleet to our river, and I believe our city members are doing their best to bring that about. If that fleet should come we can assure it of a hearty welcome, and not only will they get a welcome, but they will give an impetus to the trade of the Tyne and district which will be very welcome. The toast which you have received so kindly is one which appeals to you, and I feel that the most fitting response to it would be the chanting of MacAndrew's hymn, had not Kipling written it at such length. Many of us are dependent, more or less, upon your industries, and we rejoice with you in prosperity when it does attend your work. On an occasion like this one cannot help recollecting the fact that the little collier, the "John Bowes," was launched from the Tyne within the memory of living men; in fact, I believe Sir Charles Palmer was the builder of that boat. When one thinks of what is being accomplished to-day in the great

Cunarder which is being built on our river, and the ironclads that are coming out from Armstrong's and Palmers, it is something to be proud of. A friend of mine from the Clyde, who used contemptuously to refer to the steamship output of the Tyne as "Geordies," was the other day inclined to change his opinion, because the boats that are being turned out now will compare with anything that the Clyde can produce. I thank you very heartily for your kindness in coupling my name with this toast, and I have had great pleasure in being one of your guests.

Mr. M. WALTON BROWN also responded. He said—I thank you all for the way in which you have drunk the health of the guests, including myself amongst them. I regret that there is not present a more competent mining engineer than myself to reply on behalf of the immense mining industries of this large district.

The working of coal, iron-ore and lead-ore date prior to the invasion of this country by the Romans. The ancient Britons had passed the barbaric stage and entered upon the stage of civilization, as they were well acquainted with the use of iron. Cæsar mentioned that iron rings, of a specified weight, were used as money; and there is ample evidence, from that period, that iron-ore was mined and smelted by the Romans, in numerous districts, in Great Britain.

Workers in iron and other metals are mentioned by Moses and later writers, but the mining engineer is never mentioned; and even to-day, his value is not always duly appreciated. Mining must, of necessity, be of equal or greater antiquity, and the mining engineer of these ancient days would work the ores of iron, copper, tin and lead. The merchants of Tarshish traded in iron, lead and tin, probably derived from the mines of this country; and coal, and the ores of iron, lead and silver have been worked, from time immemorial, from the mines of this district. And it is still the duty of the mining engineer to search for and work, at the lowest possible cost, coal and iron-ores, with a view to their being utilized by engineers and shipbuilders, and the merchants of the present day.

Sir Lindsay Wood, the eminent coal-owner and mining engineer, has estimated that the coal remaining unwrought in

the Great Northern coal-field will endure at the present rate of output for more than 150 years;* and this quantity will probably suffice to smelt the iron-ores existing in Cleveland and West Cumberland.

The Institution of Mining Engineers, of which I have the honour to be Secretary, has been mentioned by Colonel Saxton White. That Institution, founded sixteen years ago, has now over 3,400 members, and comprises seven of the mining institutions of Great Britain; there were two other societies which, he trusted, would shortly be incorporated; and then the Institution would represent the entire mining industry of this country.

This concluded the toast list, and the company spent the remainder of the evening in pleasant social conversation.

* The coal remaining unwrought in the Coal-measures and Carboniferous Limestone-measures is estimated by Sir Lindsay Wood as exceeding 10,780,000,000 tons; and this quantity would supply an annual output of 44,500,000 tons (the average output of the past ten years) for 242 years or an output of 48,000,000 tons (the output of the past year) for 225 years. At the present output, coal in Durham will approach exhaustion in about 150 years, but in Northumberland it may last for over 500 years. The Great Northern coal-field is especially valuable, as the great bulk of the unworked coal will be found within 2,000 feet of the surface.

NORTH-EAST COAST INSTITUTION OF ENGINEERS AND SHIPBUILDERS.

TWENTY-SECOND SESSION, 1905-1906.

PROCEEDINGS.

SECOND GENERAL MEETING OF THE SESSION, HELD IN THE LECTURE THEATRE OF THE LITERARY AND PHILOSOPHICAL SOCIETY, WESTGATE ROAD, NEWCASTLE-UPON-TYNE, ON FRIDAY EVENING, DECEMBER 15TH, 1905.

R. H. MUIR, ESQ., VICE-PRESIDENT, IN THE CHAIR.

The SECRETARY announced that the President, the Right Hon. Lord Armstrong, M.A., D.C.L., J.P., had been called away to London on some special and urgent business and could not in consequence take the chair that evening.

The SECRETARY read the minutes of the previous General Meeting, held on the 24th November, 1905, which were confirmed by the members present and signed by the Chairman.

The CHAIRMAN appointed Mr. D. R. Macdonald and Mr. D. B. Morison to examine the voting papers for new members, and the following gentlemen were declared elected:—

MEMBER.

Kennedy, Robert Sinclair, Engineer, Glengall Ironworks, Millwall, London, E.

GRADUATES.

Fothergill, Henry, E. Apprentice, St. James, Claremont Street, Newcastle-upon-Tyne.

Hamilton, Francis A. W., Elec. E. Apprentice, 42, Lovaine Place, Newcastle-upon-Tyne.

Holzapfel, F. Maximilian, Elec. E. Apprentice, 30, West Parade, Newcastle-upon-Tyne.

Mountain, Kenneth A., Elec. E. Apprentice, The Hermitage, Gateshead-on-Tyne.

Peel, Middleton L., Elec. E. Apprentice, 5, Regent Terrace, Gateshead-on-Tyne.

Robinson, Joseph, Engineering Pupil, 31, Percy Gardens, Tynemouth.

Young, G., E. Apprentice, 19, Fern Avenue, Newcastle-upon-Tyne.

Wright, Albert T., E. Draughtsman, 12, Holly Avenue, Newcastle-upon-Tyne.

The discussion on Mr. C. Schofield's paper on "Pneumatic Tools as Applied to Ship Construction and their Advantages to Shipbuilders and Engineers" was resumed.

Mr. William F. Parish, Jun., read a paper on "The Engineering Value of Lubricating Oils."

RESUMED DISCUSSION ON MR. C. SCHOFIELD'S PAPER ON "PNEUMATIC TOOLS AS APPLIED TO SHIP CONSTRUCTION AND THEIR ADVANTAGES TO SHIPBUILDERS AND ENGINEERS."

Mr. J. H. Heck (Lloyd's Register) said—I should like to make a few remarks in order to add to and help on the discussion which has taken place on Mr. Schofield's useful paper on "Pneumatic Tools." During the last ten years I have seen these tools at work on general construction and boiler work, and so far as chipping, caulking and drilling are concerned, I agree that the tools have passed the experimental stage. Those who have had experience with pneumatic plant for such purposes appear to think that by their aid the work is better, quicker and easier done, not only for open but also for confined work. The drilling machines are especially handy tools. You can concentrate a great number of them in a small or limited area, and therefore drill a number of holes at one and the same time, which is of course a great economy in many ways; while to move a heavy plate or structure to a drilling machine entails labour and expense, and when it is got to the machine only one hole practically can be drilled at a time.

With regard to the comparative tests given in the paper, it is only fair to consider, as far as the electric drills which were employed are concerned, that we really have no particulars of the conditions under which they were worked, and I therefore think the members of this Institution will rather hesitate to take the results of one series of tests as a convincing proof of the superiority of pneumatic over electric portable drilling machines. The paper, however, in this direction will do good if it induces some of the members who are electricians to send in a paper on the adaptation of electric energy to the various portable tools which are used in shipyards and engine and boiler works.

In regard to pneumatic riveters, I am not, nor are those who have had experience with those tools, so sanguine as Mr. Schofield appears to be of their superiority in all kinds of riveting over the various methods doing the same kind of work. I remember

at the first meeting of this Institution hearing Mr. Boyd say that it was interesting to note, that while boiler makers all over the country were employing power riveters in their work, the shipbuilders of this country were using practically very little; and not only that, but for some years after Mr. Boyd's address in this room, power riveting appeared in fact to decline rather than to extend in the shipyards. It is really only during the last few years, as ships got larger and larger, that shipbuilders and those connected with shipbuilding were compelled once more to cast their attention to the subject of power riveting, while at the present time the pneumatic and hydraulic riveter is much more largely used and, as some of you know and others are aware from the public press, a great deal of the riveting in the new Cunarder we are building on the Tyne has been done by power riveters, a great portion of the shell plating being by hydraulic machines.

It is very difficult to answer, either in the affirmative or negative, questions as to the comparative value or benefit of different kinds of riveting without also at the same time giving a good many qualifications. It depends upon the nature of the work and the conditions under which it is effected. There seems, however, to be a very general opinion amongst those who have had much experience that the most efficient riveting, especially where the rivets are subject to great strain, is that produced by hydraulic power. I was therefore much surprised to hear Mr. Twaddell say he had found the pneumatic superior to the hydraulic riveter, the only reason he gave us for this opinion being that the former was not affected by frost; it is, however, quite possible, with slight precautions, to guard against this disadvantage.

In discussing this question with those having experience in this country and others who are acquainted with American shipyards, there is one opinion they agree upon and that is, if pneumatic riveting is employed you must have the work or plates close together; and it was freely admitted, even by its advocates, during the discussion of a somewhat similar paper, which was read some years ago before the Institution of Civil Engineers, that it was quite as easy to have bad work with the pneumatic riveter as with hand riveting. In order to keep the plates close together it is necessary to have it well bolted, as it is not easy to ply the work together with the pneumatic riveter.

In the matter of the dolly it has been pointed out that the quality of the work of the pneumatic riveter depends largely upon the backing which you can give the dolly; for light work it is possible to make a good job by holding the dolly in the hand, but for heavy work it does not matter whether you have a pneumatic or spring dolly such as Mr. Schofield recommends. You must have a good, heavy, substantial backing, and unless you have that you are never sure that you get good and efficient work.

In regard to the shell riveting in ships, even those who have used pneumatic tools for the internal structure and speak highly of pneumatic riveting do not care to employ such riveting for shell work, and some admit at once that they have tried it and given it up, as the result has not been satisfactory, owing to the difficulty of properly laying up the head of the rivet so thoroughly as can be done by ordinary hand riveting. In time we may perhaps do better, as there are many who are giving the matter much attention and are proposing modifications in the structural arrangements. For instance, Mr. Mathieson, of Hebburn, advocates the flanging of the plates internally, as illustrated by Plate VIII., by means of which he claims it would be possible either to use the yoke pneumatic riveter or a light gap hydraulic riveter for riveting almost the whole structure of the ship. Anyway, now that this important matter is receiving serious attention, I have very little doubt that when the generation to which I belong and the one which has preceded me have died out the younger and rising generation of shipbuilders will tackle the question, and so modify the structural arrangements of ships that all the riveting will be effected by some form of power machine.

In regard to the expense of a pneumatic power plant it is somewhat difficult from the paper, when dealing with this point, to form an idea as to the cost of fitting, working or keeping in order a pneumatic installation. Perhaps Mr. Schofield could add to the completeness of his paper by giving a little more information in regard to this question.

We are told of compressed air having been used for hoists, winches and other machines; I assume it is only intended to be used for such purposes on special occasions, because to use it generally for power purposes in a shipyard would, I am sure,

spell extra expense and cost compared with that entailed by the steam or electric energy which is now so largely employed. Electric energy, especially, can so cheaply and quickly be used to transmit power from one point to another—the use of large power stations admits of it being produced economically—that it would be difficult, in my opinion, to get the same efficiency from a number of separate pneumatic installations, if it were attempted to use compressed air solely for all the various power requirements of a shipyard or engine and boiler establishment.

The question of power riveting is so important that it would add much value to the paper, and also to the *Transactions*, if the paper were thoroughly and fully discussed. We are indebted to Mr. Schofield for bringing the subject before this Institution.

Mr. George Vardy said—Unfortunately, I have only had time to read through Mr. Schofield's paper to-night and consequently am unable to discuss it as I would like, but I rather agree with what Mr. Heck has said regarding riveting the internal work. Where, as Mr. Heck pointed out, you can get a good backing, the work is excellent. No one, I think, can complain of the speed or the quality of the riveting. But in shell work, the difficulty of getting a convenient arrangement for supporting the riveter and holder up has up to the present put this rather out of the question, mainly on account of speed. The work with pneumatic tools is certainly better than hand work and if some convenient arrangement were devised, then I think that shell riveting by pneumatic tools would entirely supersede hand work. The only other point I would like to mention is this—Mr. Schofield said in his paper that one of the most prominent shipbuilders on the Clyde had said that they had turned out 20 per cent. more tonnage from the same building berths by the use of pneumatic tools. I think, as shipbuilders on the Tyne, we would like a little more information on that point. It would be very interesting to know just how it is done.

Mr. Harold Thomson said—Mr. Heck has so ably covered the ground from an engineer's point of view that he does not leave much else to be said, but there are one or two points which

might be mentioned. Pneumatic plant for caulking and drilling has now been in use in engine works on the north-east coast for a number of years. This being so, probably the paper has been written more especially for shipbuilders, who, speaking generally, have not yet introduced this form of power. It is only recently that pneumatic riveting has been used to any great extent in boiler works on this coast, so that the portion of the paper which deals with this subject is the most interesting to engineers. I know that in the minds of some people there is a prejudice against pneumatic riveting, and I have heard the opinion expressed that the head of the rivet is formed without swelling the body. Experience, however, proves that this is not the case; on the contrary, the body of the rivet is swelled very excellently, and if it is required to remove a rivet it is necessary to drill it out. Hydraulic riveting for boiler work is acknowledged to be the ideal thing, but in certain portions of a boiler, as, for instance, in the closing seam of a combustion chamber, it cannot be done. In such a case, pneumatic riveting is certainly greatly superior to hand work, and it is an easy matter, inside a combustion chamber, to fix up a pneumatic holder-on. Among other uses for pneumatic power that have not been mentioned, I believe I am correct in saying that in some works it is employed to drive boiler tube expanders. Possibly the author may be able to give us some information on this subject. With regard to the cost of upkeep, Mr. Schofield says—"The amount that should be added to machine cost to cover interest, maintenance of plant, and operation of compressor is about 15 per cent. of the gross earnings of the tools." My own opinion is that this amount should be more than doubled, and that 15 per cent. is an inadequate allowance. Possibly, if all the hammers in the installation were working at their fullest output continuously, it might be right, but the "load factor," if I may so call it, of a pneumatic plant, especially in a shipyard, would probably not be very high, and I think that the figure he gives requires justification. With reference to the gain that is got by using pneumatic tools, I think it will be found that this lies not so much in the reduced piece prices but in the greater output that is obtained, seeing that what is gained in piece price is to a large extent counterbalanced by the cost of maintaining the plant. However that

may be, I have no doubt that pneumatic riveting has come to stay, and that in a few years all the shipyards on this coast will have installed a pneumatic plant.

The SECRETARY read the following communication:—

33, OSBORNE ROAD,
NEWCASTLE-UPON-TYNE.
13th December, 1905.

DEAR MR. DUCKITT,

I probably will not be home in time for the meeting, therefore I send you the few remarks I intended to make on Mr. Schofield's paper on "Pneumatic Tools," a paper of special interest to all those connected with the building, preservation and repairing of steamers.

The pneumatic hammer has without doubt been a wonderful success in its application to chipping and caulking, and in the near future will assuredly prove as great a success, when applied economically to shell riveting, as apparently it has done in America. Some few years ago I witnessed a demonstration of pneumatic shell riveting at Greenock on a part of a vessel's hull erected for this purpose, the operators being American workmen brought over for the demonstration; but this did not prove altogether a success. The rivets were well driven and filled the holes thoroughly, but the defect was in the pneumatic holder-on, which was set up in position against an erection of planks that had a continual springing motion when the rivet was being driven, resulting in the rivet head not being closed up to the plate. The gear for carrying the hammer was a very cumbersome erection, and there appeared to be difficulty in placing the hammer in position, and keeping it there, also considerable time lost in moving the gear to another berth. The gear shown by Mr. Schofield on Plate VI. is a decided improvement upon what was in use on the occasion referred to. I think considerable interest was taken in this demonstration by the shipbuilders on the north-east coast, therefore some one may be present who can explain more clearly what were the defects and deficiencies of this trial.

In the preservation of steel vessels particularly, the pneumatic hammer can play an important part. We all know the time,

trouble and expense expended in scaling the vessel inside and out, usually done by hand labour, which is naturally slow and costly, but this could be overcome by having a small air-compressor on board to work say half-a-dozen hammers. The scaling could be done much quicker and more efficiently and afterwards the air can be applied to the pneumatic painter. There is also the scaling of boilers, for which as a rule little time is allowed, and I am sure the "chief engineer" would be very pleased, if he could accomplish in one day, what usually takes four. The compressor could be utilized for working a pneumatic hoist, handy in overhauling, also applied to an air-driven ash hoist, and for sweeping tubes. I have no hesitation in stating that the time is not far distant when the air-compressor will be of as much importance on board ship as the electric dynamo is at the present day.

The pneumatic drill has also proved itself to be an immense labour-saving appliance when applied to drilling countersinks on the bottom of a damaged vessel, reaming rivet holes, etc.

In conclusion, I congratulate Mr. Schofield in bringing before the Institution a paper upon such an important subject, the application of which is unlimited, and which is certainly in its infancy.

Yours faithfully,

DAVID ANDREW.

The discussion was again adjourned.

THE ENGINEERING VALUE OF LUBRICATING OILS.

By WILLIAM F. PARISH, Jr., Member Am.S.M.E.

[Read in Newcastle-upon-Tyne, on Friday, December 15th, 1905].

Comparative engineering as a branch of the consulting engineering business, connected with the buying and selling of material, has been developed to a point of perfection in the oil business that makes a description of the methods used and results obtained of great interest to engineering societies, as we can judge by the many applications for papers on this subject. The necessity and advisability of developing the oil business along engineering lines has had the result of bringing forth the lubricating engineer, a trained practical man making a speciality in a rather limited field, with the result that he becomes very expert in his work. This work is not monotonous, in fact it presents problems at times of considerable importance, and rarely is the character of a job duplicated. The fundamental principle of the lubricating engineer's work is to make machinery go more easily, at less cost, and with less wear and trouble. All his efforts are towards economy, and therefore he has a well-earned place in the modern plant.

It will not be necessary in this paper to give a treatise on the methods of refining and manufacturing oils, or to show the chemical and physical characteristics of different lubricants. It will serve our purpose to make the statement that it is possible to manufacture lubricants so that they will contain a maximum amount of lubricating power. By the use of these lubricants a lower temperature will be produced in the bearing, and a reduced horsepower reading to the machine or mill, which cannot result if lubricants that are made without due care and knowledge are used. That this is so, will be understood when the results of a few tests are shown. The frictional reductions given

were obtained by the use of oil alone, and these reductions were premeditated, estimated upon, and considered with the same care and exactness that is exercised by the engineer who figures on the values to be obtained by installing an economizer or condensing plant. Were it not possible to make some oils with more lubricating power than others, we should be unable to reduce the lubricating business to such a science.

The necessity of the engineer was felt when the experimenter started to show the varying values to be obtained by the use of different lubricants upon friction-testing machines. It was at first supposed that these values or coefficients could be transferred to actual work, but it was found that this was not the case. A certain oil would prove to be the best upon the friction machine, and yet when applied to actual work it would not do at all; the reason being that the conditions were not comparable, the testing machine being nicely adjusted, with the pressure evenly placed, the surrounding temperature constant, and the atmosphere clean. In the case of railroad work the conditions were exactly the reverse, and the lubricants, if too finely selected, would break down and become useless. It was intended by the originators of these machines that they should be used to give an indication of the comparative frictional values of lubricants on the basis of those particular machines only, Professor Thurston saying that "it is obvious that experiments made upon a nicely fitted journal of a testing machine are not conclusive as to the fitness of a lubricant for use on a bearing that is not well made."

Practical Observations.

It was early appreciated by the large manufacturers of lubricating oils that it was possible to make a class of oils which would give economic results sufficient to justify the cost, care and attention necessary for their production. Most of the data depended upon for developing these oils were obtained by practical observation. An oil would be placed on a machine, with the result that the temperature of the bearings would be slightly reduced. Another oil would be put in for the same work and a greater temperature reduction would be noticed. The use of the oil would be extended, and a report of "satisfactory" would be based upon the general opinion of the operators

that the machines were running freer, that it did not take the same attention or the same amount of oil to keep the job going. No figures or percentages of reductions of temperature or power were obtainable except in rare cases. Reports obtained from machine operators, while encouraging, were always subject to a doubt as to whether the next set of operators would notice the same effect, and it did not allow the business to be placed upon the basis of an exact science. The practical observation era was filled with events of considerable interest, all of which prove the existence of engineering possibilities through the use of oil, as the following instance will show.

A large manufacturer of lubricating oils, Mr. C. M. Everest, in a paper delivered before a congress of engineers in 1893, gave the results of some observations of the lubrication of a flour mill that was run by two water wheels, similar in size. A trial was made with grease, the section on No. 1 wheel being fitted first. As the grease was put in, displacing oil, the speed of the mill decreased, with a consequent decrease of production. At first no one thought that the grease was responsible for the increased friction, but as the other part of the mill slowly dropped in speed as the use of the grease was extended, a consulting engineer was called in, who soon found out that the reduction in speed had followed the introduction of the grease. The grease was therefore taken out and oil put in, and the speed of the wheels went up to what it was before.

Where Observations are Wrong.

There is an element of risk in acting upon the reports and ideas of operators who are not especially expert in the work under consideration, and the following incidents will show how a business depending upon the observation of men not employed for the purpose of watching results is apt to be developed in an undesirable direction, as shown by the following:—

(1) In a mill which was undergoing a change of lubrication, a complaint was made that the entire line shaft equipment of ring-oiling hangers was so hot through non-lubrication that the mill could be operated only with danger. An immediate investigation was made, 75 per cent. of the bearings were found to be uncomfortably warm, and 10 per cent. of them nearing the

danger point. Upon examining the material in the hanger wells, it was found that the mixture was composed of cylinder oil, grease, dust and cotton fibre. In fact the oil for that particular work had not been opened. These bearings had been warm for a considerable time, and it was only when the attention of the operators was called to a change being made throughout the mill that they thought of reporting.

(2) On a rolling mill, where a line of new oils was being tried under the supervision of a lubricating engineer, a report came in that the 14 inches mill engine was stopped owing to a hot pin. The works engineer did not blame the new oil particularly, but suggested that possibly the change of oils had something to do with it. The engine was started and with the application of cylinder oil to the pin from time to time, was kept running for the day. Ordinarily this would quite condemn the new oil. When the event passed, the engine attendant, in conversation with the lubricating engineer, let drop the fact that during the first week's run on the new oil the crank pin had worked very coolly, but it had been warm the second week, whereupon the lubricating engineer started an investigation, and found that during the second week, when the pin was so warm, the oil was not the new oil, but an oil supplied from another source.

(3) On a large vertical engine in an electricity works, the high pressure cylinder was opened, and the walls were found to be scored and to have ridges brazed upon them for the entire length of the cylinder. The matter looked serious, as a charge was made by the station people that it was caused by the new oil. On the piston being examined the ring seat was found very badly gashed, and this on a part of the piston which is never supposed to touch the walls of the cylinder. The conclusion arrived at by the builders and station people was that the piston was too tight a fit, and, in starting the engine quickly, the piston had expanded sooner than the cylinder, with the result that parts of the piston were actually brazed on the cylinder walls.

(4) In a cotton mill, where a power test was being made, all of the oil was changed and the engineer who had charge of the job, in talking with the spinning room overseer, was told that if the buyer did not get better cotton than he was now sending in they would have a labour strike. Later, the lubricating engineer was noticed examining the machinery to see how it was

acting under the new oil, and word was passed round among the operators that it was the oil that was causing the trouble. Whereupon next day they struck, and finding the lubricating engineer in the yard, proceeded to handle him very roughly, until he was rescued by the office people. As a matter of fact the new oil was the best the mill people had ever had, the temperature of the spindle bases being reduced 27 per cent. by its use and the power 4·6 per cent.

Mechanical Effects.

It will be seen that practical observations are subject to an element that is hard to control. There are methods, however, of getting much that is of value from the operators. If in a textile mill it is the general opinion among the spinning hands that the frames start up easier and take a longer time to stop after the belts have been thrown to loose pulleys, it is evident that the spindles are running lighter; and when the engineer of a winding-engine in a colliery states that he opens his throttle valve *later* and closes it *sooner*, on a wind, it shows that his engine friction has been reduced; and in a rolling mill, when they can turn back the rolls by hand, where previously it was necessary to use the engine, the lubricating engineer sees indications of the effect he is working for, following the introduction of his oil.

A clever method used by a chief engineer in a large textile mill to tell whether everything was right with his engine and shafting load, was by counting the revolutions made by the main engine after steam had been turned off. The throttle valve was closed in exactly the same way every time, and the free run of the engine gave a very good indication of the friction load. A comparative lubricating test was made upon this mill, and the following results were noted by the engineer of the mill.

	Revolutions.
Run after throttle was closed—before change of oil ...	35
Oils only partially changed in two weeks	39
One week later	40
One week later	41

These are valuable practical observations, indicating the value of better lubrication.

Reductions in Oil Consumption.

A good economical lubricant for steamships is castor oil. This oil has certain detrimental characteristics such as having the power to generate a fatty acid, and oxidizing. It protects itself against displacement by leaving an unnoticeable deposit, which, when any other lubricant is put on the bearing, turns into a varnish-like film, fills up the oil space, and causes trouble. Considerable care must be exercised in making a change to any other kind of lubricant. It is possible to substitute an oil made especially for the work in place of castor, and secure a reduction of temperature to all bearings, which means less power, with reduction of consumption and of cost.

Comparative consumptions on one large ship being:—

	Gallons per day.
Castor oil	5
New oil	3½
Reduction	1½

or 30 per cent.

On another:—

Castor oil	17
New oil	8
Reduction	9

or 53 per cent.

Several other reductions against ordinary marine oils could be given, each reduction also showing a lessened temperature of the bearings and an absolute freedom of trouble by heating, as under:—

	Gallons per trip.
Old oil	800
New oil	500
Reduction	300

Or 37·5 per cent.

Old oil	1,200
New oil	1,000
Reduction	200

or 16·5 per cent.

Other reductions in consumption from 33 per cent. to 60 per cent., show that it must be possible to make a lubricant that contains a maximum amount of lubricating power, as a reduc-

tion of consumption of oil on a steamship can only be brought about by using an oil that will wear longer, and that when a reduced amount is used will secure a lower temperature to the bearings and pins.

In an electric power station the same proof is had, the following instance showing that in this one particular case the value could not be obtained from the most expensive oil.

On a 2,500 H.P. engine it was necessary to feed 1½ gallons per 8 hour shift of cylinder oil selling at 5s. 6d. per gallon. A change was made to another oil, and the consumption was reduced to ¾ of a gallon for the run. The condition of the engine was greatly improved, though no figures of friction could be secured.

	s.	d.
1½ gallons or 6 quarts 5s. 6d. per gallon ...	8	3
¾ ,, 3 ,, 3s. ,, ...	2	3

Reduction, 50 per cent. in consumption and 30 per cent. in cost.

Power Testing.

Almost every practical man knows of innumerable instances where trouble has followed the introduction of a poor oil. Some have facts relating to the effects following the use of a better oil, but only a few have any data showing the actual comparative result of using lubricants previously intended to produce a reduction in power.

Practical testing of lubricants by means of power-indicating instruments started with the dynamometrical tests of cotton-spinning frames. These tests were of a very conclusive nature. The proposition was an interesting one. A cotton-spinning frame is composed of from 100 to 400 ring spindles, half the number being on each side of the frame, and which are driven at a speed of from 7,000 to 12,000 revolutions by means of cotton bands from a centre drum which turns from 700 to 1,700 r.p.m. Sixty-five per cent. of the friction of the machine is in the spindle bases, which are small reservoirs in which the lower end of the spindle revolves. Whatever resistance there is in the spindle base determines the percentage of band slip from drum to whorl, or small pulley on the spindle. Increasing the resistance by a poor oil will not only increase the temperature of the spindle bases and increase the power to drive the frame, but will also add to the slip of the driving band. Decreasing the resistance

will decrease the temperature due to friction, decrease the band slip, allowing the spindle to drive nearer its theoretical speed, and decrease the horsepower necessary to operate the frame. This was proved and recorded in hundreds of cases, reductions of power from 3 per cent. to 40 per cent. being shown. While watching and conducting tests of this nature the point presented itself that the same result could be obtained by operating on an entire mill instead of on one machine, and plans were accordingly made for a larger test. Seven expert operators were employed and the test required five days on each condition of lubrication. It required several weeks to chart and tabulate all the figures taken for both tests. The results were satisfactory. There was no question that could be asked by a mill man that was not answered by the charts made up from the information secured. The results showed a reduction of 7·0 per cent. of the total power of the mill; a reduction of 28·2 per cent. temperature of spindle bases; a reduction of 13·5 per cent. power of spinning frames; a reduction of 7° temperature of room, and an increase of nearly 4 per cent. in the relative humidity, with an increase of 4·3 per cent. spindle speed. It was then found that the main data of subsequent tests would have to come from the engine-room, and that the ordinary method of handling indicators even by the best men on the business was inadequate. After two years' investigations a system of indicator work was perfected that allowed of 500 cards a day being taken from four indicators, and the average indicated horsepower of all the cards figured by the end of the day's test, with only two operators on the job.

Some very remarkable tests have been completed, not the least being on a textile mill driven by water wheels. It has been found possible to operate with 181·3 horsepower on the mill over and above what the wheels formerly carried (this power originally coming from an adjacent mill run by an engine), and still have a reserve head for governing. The reduction in horsepower was 6·8 per cent. and was produced by the greater lubricating power of one set of oils as compared with another.

One of the most conclusive tests made in America was on a textile mill. The report shows nearly every item that should follow a reduction of frictional resistance caused by a better lubricant. The total power was reduced 11·31 per cent., shafting load, 12·35 per cent. Speed throughout the mill was

increased 1 per cent., which represents that much increase of production. Spindle speeds were increased 575 revolutions per minute, while the frame speeds increased 1·2 per cent., band slip being reduced from 13·5 per cent. to 7·5 per cent. Engine speed was the same on both tests—averages being taken from three sets of readings of speed of spindles from twenty-eight frames. The amount of machinery was the same and all data is comparable.

A similar test was recently made in Scotland, where there was a reduction of 10·7 per cent. in the total power of the mill, and the speed of spindles increased 2·8 per cent. All readings comparable. It was necessary to take 2,840 indicator cards during the complete test, from which averages were secured.

Out of a dozen good textile mill tests made in Japan is one showing a total reduction in horsepower of 12·5 per cent., another 14·92 per cent. and still another 20·3 per cent. These tests are all carefully made with modern instruments, the total number of indicator cards taken on the first test being 480, which is nearly equalled in the other tests.

A test made in Russia on a flax mill shows a reduction in horsepower of 13·5 per cent., and a German jute mill gives a reduction of 9·53 per cent.

A coal consumption test made in India gives a reduction in coal for the first four months (comparing the same months of previous years) of 7·2 per cent., and for the next three months 11·2 per cent., the conditions not quite comparable, as machinery amounting to 2½ per cent. of the total power had been taken off. The reductions therefore should be about 5 per cent. and 8·9 per cent. To show the method of estimating the possible reduction on a mill this case may be given as follows:—

Oil in Use.	Oil Proposed for Reduction.	
Engine oil	Castor *v.* E. oil ...	7 per cent.
General oil	B.H.E. *v.* A.M. oil ...	8 ,,
Shafting oil	B.H.E. *v.* A.M. oil ...	10 ,,
Spindle oil	G.S. *v.* V.R. oil ...	11 ,,

The power of the mill was divided as follows (estimated on the basis of 800 horsepower), and the value of the per cent. reductions are noted:—

Shafting	...	...	200 H.P.	...	Reduction 20 H.P.
Spindles	...	...	400 H.P.	...	,, 44 H.P.
General	...	...	200 H.P.	...	,, 16 H.P.
			Total reduction	...	... ... 80 H.P.

which is the approximate amount of power to be obtained by changing from old oils to the lubricants covered in the estimate.

These tests have all been made on cotton, woollen, worsted, jute and flax mills, and it will now be my pleasure to give you in full the results of an exceedingly interesting test made upon a tandem compound Corliss valve rolling mill engine, running light for one comparative set of readings, and with empty rolls on for the check test. Permission has been given to use the name of the firm for which these tests were conducted, as both series of tests were run under their personal supervision.

Before going farther, a little incident might show how these tests are started. One of the testing men sent in a report of the condition of a large winding-engine in a colliery. He said the guides were hot, as were also the main bearings and pins, and that the engineer had considerable trouble in reversing the engine. The opportunity was an excellent one for a comparative power test. A series of cards were carefully secured covering two days on the condition the engine was in when found. The cards were all taken at a certain time on the wind, and though no special pains were taken the load in the cage was supposed to be the same. The variation did not amount to over 8 per cent. on the greatest range, maximum to minimum readings. The difference between both tests amounted to 163·3 horsepower, or 12 per cent. on the total load. The temperatures of the guides were reduced 65 per cent. The results were a surprise, as the 12 per cent. did not in any way indicate the value of the work. The results were published, however, to see what the practical men would have to say, and at a later date, no criticisms having come in, we attempted to publish the facts as they actually seemed to us. The test being on the full load of the engine, the percentage (12 per cent.) was a small one, as there was a large work load represented by coal being pulled up, which was in no way influenced. Had we deducted the work load, which would certainly have represented at least 85 per cent. of the total, our reduction of 163·3 horsepower would represent 71·1 per cent. of the power of the engine. That such a reduction

could be effected met with a storm of disapproval and the matter was withdrawn. However, we desired to see exactly how much friction was lost on an improperly lubricated engine of large size, and arrangements were made for the following test.

This test was conducted by men who are not equalled as comparative testing experts. Every care was exercised, and the proprietors interested themselves and worked with us. The results may therefore be taken as absolutely correct.

A Comparative Power Test.

The engine was made by Messrs. M——, of Heckmondwike, Yorkshire, in 1902, and is fitted with their patent Corliss valves on both high and low pressure cylinders. Size of cylinders 24 inches by 40 inches by 5 feet stroke; steam pressure 100 lbs. per square inch; revolutions 40 per minute; average indicated horsepower 500. The engine runs continually on rolling mill work from Monday morning until Saturday noon, with the exception of short stops at intervals for oiling-up.

A good brand of grease was used on the crank pins and in the main bearings, one of the reasons being that in the main bearings the grease served as a protection against dust, which, in a rolling mill where the engine is exposed, is a serious problem. Cylinder oil was used on the guides and in the cylinder.

A new cylinder oil was introduced, one specially adapted for this class of work, one that has a peculiar characteristic: that its greatest efficiency for power reduction work was only to be obtained through the use of a small amount. A suitable high-grade engine oil was used on the balance of the engine, with an occasional application by hand to the main bearings where it was put through the grease. Some sight-feed oilers were also fitted to the guides.

Under the old conditions of lubrication, on April 1st, 1905, a power test was made, ten sets of cards being taken (forty cards in all) with the engine running light, the rolls having been thrown out of gear. The rolls were then put in and run light, no work being done on them whatever, and ten sets of cards were taken on that load.

Temperatures of the slides were taken on April 10th, 11th

and 12th, 1905, under the old condition of lubrication, to obtain a temperature basis to work upon. On April 12th the oils were changed entirely, the new oils being used as mentioned before.

Temperatures of the slides with the new oils were taken on April 15th after four days' run, and also on May 16th after five weeks' run. The temperatures of the slides were taken at regular points and compared with the temperature of the room, the difference between these two readings being the temperature due to friction, or the actual temperature of the guides.

A second, or comparative indicator test was made on May 20th, 1905, using the same instruments on the same places, and operating with the same men.

Figs. 1 to 4 (see pages 76-79) are reproduced from representative sets of indicator cards taken on each test, the decrease in area of the diagrams, due to reduction of power, being very marked.

The action of the governors in the second test when the engine was inclined to run faster, due to the decrease of friction, is clearly shown by the alteration in the point of cut off, and the loops at the ends of the low pressure cylinders are increased, so that the negative area enclosed by the loops is much greater than the positive area enclosed by the remaining part of the diagrams.

These abnormal cards are the result of running the engine light, and show clearly that although on a full load the valves may be set correctly, to give equal work in both cylinders, yet with a very light load it may happen that work has to be done in one cylinder to overcome a resistance in the other.

The instruments used on this test for obtaining the results were four Crosby indicators. These instruments are usually operated by Sargent's electro-magnets, which allow of all indicators in use being put into action at the same time, simply by closing a switch which completes a circuit to the magnets, putting the pencils up to the paper and taking all diagrams simultaneously. In the present test the instruments were run by operators stationed at each indicator, as, being only a short test, it was not considered necessary to fit up the electrical equipment.

Two Crosby reducing wheels were also used—one on each engine, the cord being attached directly on to the crosshead.

The cards were all worked out with Amsler's No. 6 planimeter, and the horsepower figures with Keuffel & Esser's 20-inch slide rule. All log sheets were worked on a Burrough's adding machine, so that the entire test was mechanically made, and the personal error eliminated as much as possible. All cards were worked out and checked by the expert engineers and also by the principals of the firm, who approve of all readings and results.

The entire test was carried out under the personal supervision of a member of the firm.

The results of the test were as follows:—

	I.H.P.	I.H.P.
April 1st, 1905, 1st test, with old oils in use :—		
Engine and train of rolls	136·9	—
Engine only	—	94·2
(Average of forty cards.)		
May 20th 1905, 2nd test, with new oils :—		
Engine and train of rolls	107·1	—
Engine only	—	41·4
(Average of forty cards.)		
Reduction on engine and rolls	29·8	—
,, engine only	—	52·8

These results show a reduction of 56·0 per cent. on the power of the engine only. (See pages 80-81, Figs. 5 and 6.)

The apparent discrepancy in the difference between the indicated horsepower of the engine and rolls and the indicated horsepower of the engine only is accounted for by the fact that before the first test the rolls had been lifted three-sixteenths of an inch so as to be in line with the engine shaft, whereas on the second test the rolls were not lifted for alignment, so that on the second test there would be more friction on the rolls than during the first test. The lubrication of the rolls was the same throughout.

TEMPERATURE OF SLIDES.

April 10th, 11th and 12th, 1905, old oils :—	
Average increase above room	33·0°F.
April 16th, 19th, 26th, May 16th, 1905, new oils :—	
Average increase above room	12·5°F.
Reduction in temperature	20·5°F.
or 63·0 per cent.	

The cost of lubrication with the high-grade oils was reduced by 19 per cent., the actual quantity of oil required being reduced to one-third of that required with the previous oils.

TABLE I.—LOAD: ENGINE ONLY. OLD OIL, MILL.

Time.	High Pressure.		Low Pressure.		I.H.P.
	Front.	Back.	Front.	Back.	Total.
3·52	52·2	63·0	−3·02	−19·7	92·48
	51·2	64·6	−3·02	−18·2	94·58
	54·1	63·0	−4·74	−14·9	97·46
	56·1	57·3	−3·88	−17·2	92·27
	54·4	58·6	−2·16	−17·5	93·34
	52·2	60·2	−3·88	−17·1	91·42
	58·3	57·3	−3·88	−17·5	94·22
	52·9	57·9	−1·72	−16·6	92·48
	53·5	57·0	−3·88	−16·6	90·02
4·10	61·1	57·6	−2·16	−13·1	103·44
Averages ...	54·5	59·7	−3·23	−16·8	94·2

TABLE II.—LOAD: ENGINE AND TRAIN. OLD OILS.

Time.	High Pressure.		Low Pressure.		I.H.P.
	Front.	Back.	Front.	Back.	Total.
5·00	64·9	70·9	7·36	− 3·06	140·50
	64·3	66·5	7·76	− 6·57	131·99
	75·0	68·1	9·49	− 6·13	146·46
	66·8	65·5	6·46	− 8·75	131·00
	66·8	68·7	9·49	−10·50	134·49
	66·3	70·3	8·62	− 4·81	140·61
	68·1	66·8	5·17	− 5·77	134·30
	62·1	68·1	8·62	− 4·81	134·01
	67·7	69·4	7·76	− 4·81	140·05
5·10	69·4	62·4	9·06	− 4·81	136·05
Averages ...	67·1	67·8	8·02	− 6·00	136·9

TABLE III.—LOAD: ENGINE ONLY. NEW OILS.

Time.	High Pressure.		Low Pressure.		I.H.P.
	Front.	Back.	Front.	Back.	Total.
1·21	36·1	37·4	− 9·9	−27·2	35·4
	36·1	40·2	−11·6	−26·3	38·4
	35·2	47·5	−12·5	−28·4	41·8
	35·2	41·2	−10·3	−23·6	42·5
	32·9	44·0	−11·2	−24·1	41·6
	34·6	45·0	−11·6	−25·4	42·6
	28·8	45·0	−12·5	−30·2	31·1
	41·2	47·5	−10·3	−24·5	53·9
	36·4	53·5	−10·3	−21·9	57·7
12·35	29·2	40·9	−11·3	−29·4	29·1
Averages ...	34·5	44·2	−11·2	−26·1	41·4

TABLE IV.—LOAD: ENGINE AND TRAIN. NEW OIL.

Time.	High Pressure.		Low Pressure.		I.H.P.
	Front.	Back.	Front.	Back.	Total.
12·55	52·8	62·4	1·29	−11·8	104·69
	59·2	64·6	0·00	−13·1	110·70
	57·3	67·8	−1·72	−14·0	109·38
	55·4	64·6	−1·72	−13·1	105·18
	61·7	65·2	2·58	−10·1	119·38
	61·4	68·7	4·31	−10·1	124·31
	50·6	66·2	0·00	−12·2	104·60
	53·8	65·5	−2·16	−14·4	102·74
	52·2	57·3	−5·61	−14·9	88·99
1·01	52·2	62·1	0·00	−13·1	101·20
Averages ...	55·7	64·4	−0·3	−12·7	107·1

TABLE V.—TEMPERATURES.

		Engine Room.	Guide Bars.	Difference due to Friction.
Old Oil—		° F.	° F.	° F.
April 10th	a.m.	61	91	30
	p.m.	59	92	33
April 11th	a.m.	60	95	35
	p.m.	63	93	30
April 12th	a.m.	57	94	37
	p.m.	59	80	21
New Oil—				
April 13th	a.m.	67	85	18
	p.m.	66	82	16
April 14th	noon	63	81	18
April 16th	noon	66	80	14
April 19th	noon	69	82	13
April 26th	noon	67	80	13
May 6th	noon	72	83	11
May 16th	noon	80	89	9

TABLE VI.—TEMPERATURES.

	Engine Room.	Guide Bars.	Difference due to Friction.
Old Oil—	F.	°F.	° F.
April 10th	60	91	31
April 11th	62	94	32
April 12th	58	94	36
Average			33·3
New Oil—			
April 16th	66	80	14
April 19th	69	82	13
April 26th	67	80	13
May 16th	80	90	10
Average			12·5

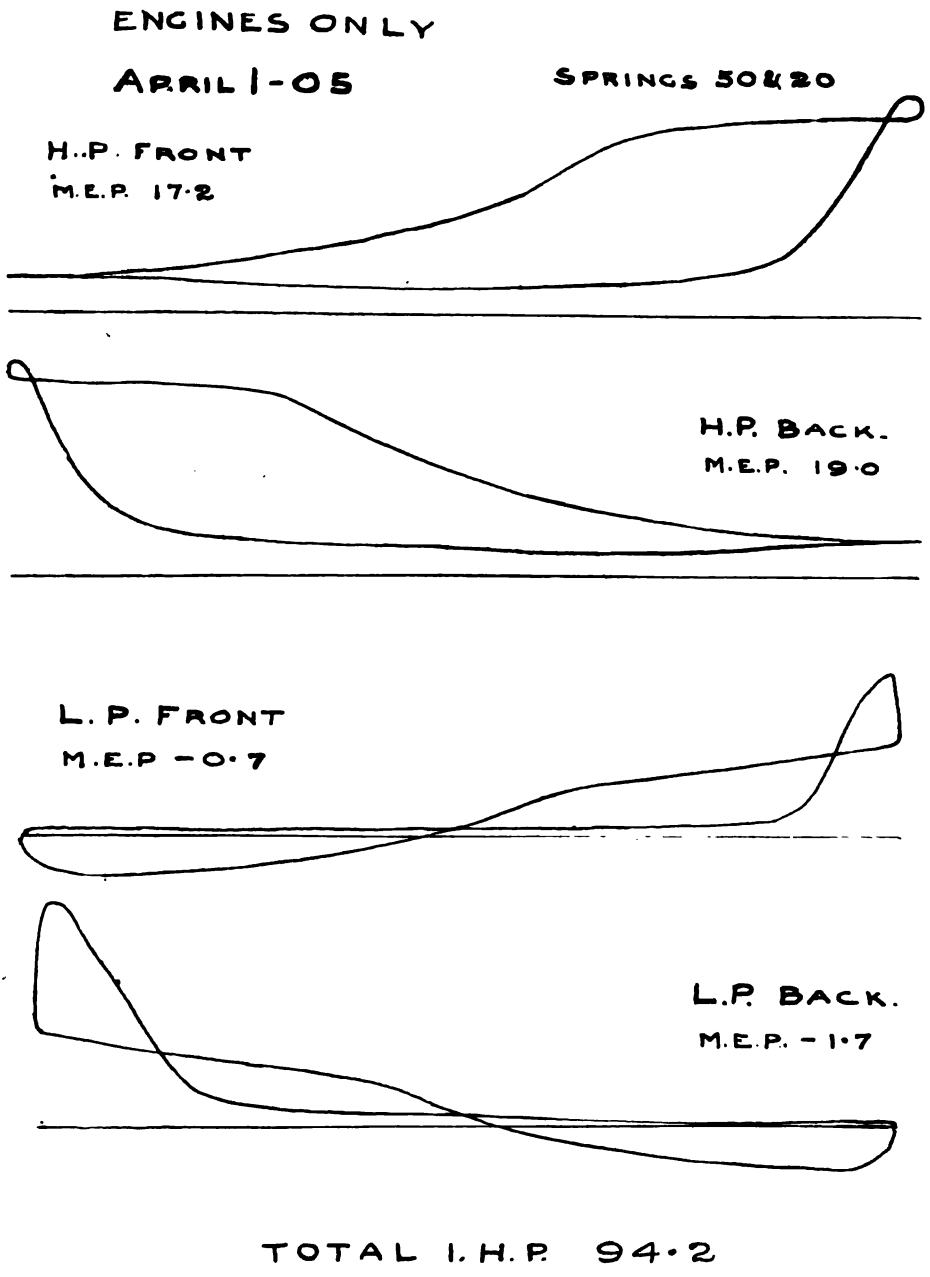
ENGINES ONLY
APRIL 1-05
SPRINGS 50&20
H.P. FRONT
M.E.P. 17·2
H.P. BACK.
M.E.P. 19·0
L.P. FRONT
M.E.P -0·7
L.P. BACK.
M.E.P. - 1·7
TOTAL I.H.P. 94·2

FIG. 1.

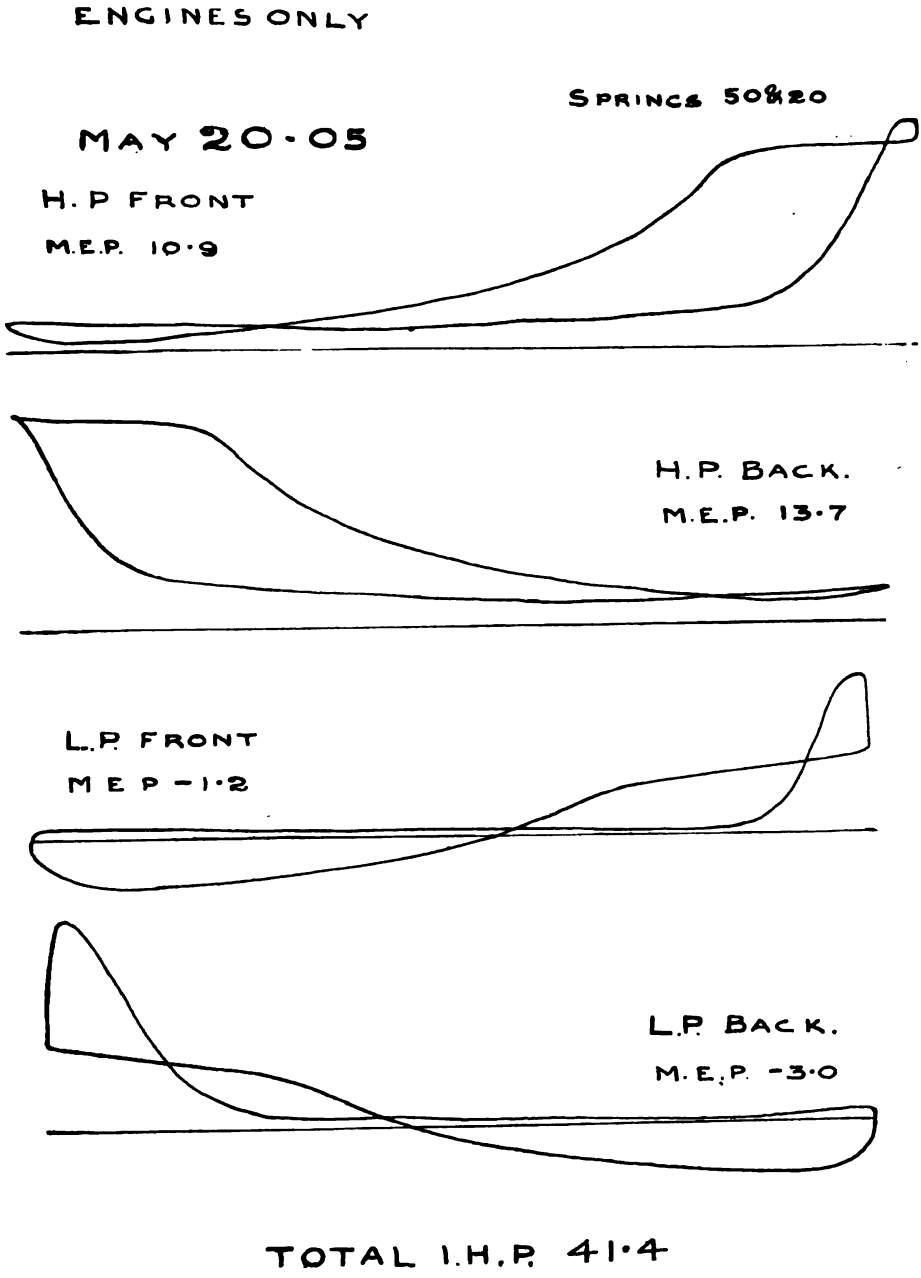
ENGINES ONLY
SPRINGS 50&20
MAY 20·05
H. P FRONT
M.E.P. 10·9
H.P. BACK.
M.E.P. 13·7
L.P FRONT
M E P -1·2
L.P. BACK.
M.E.P. -3·0
TOTAL I.H.P. 41·4

FIG. 2.

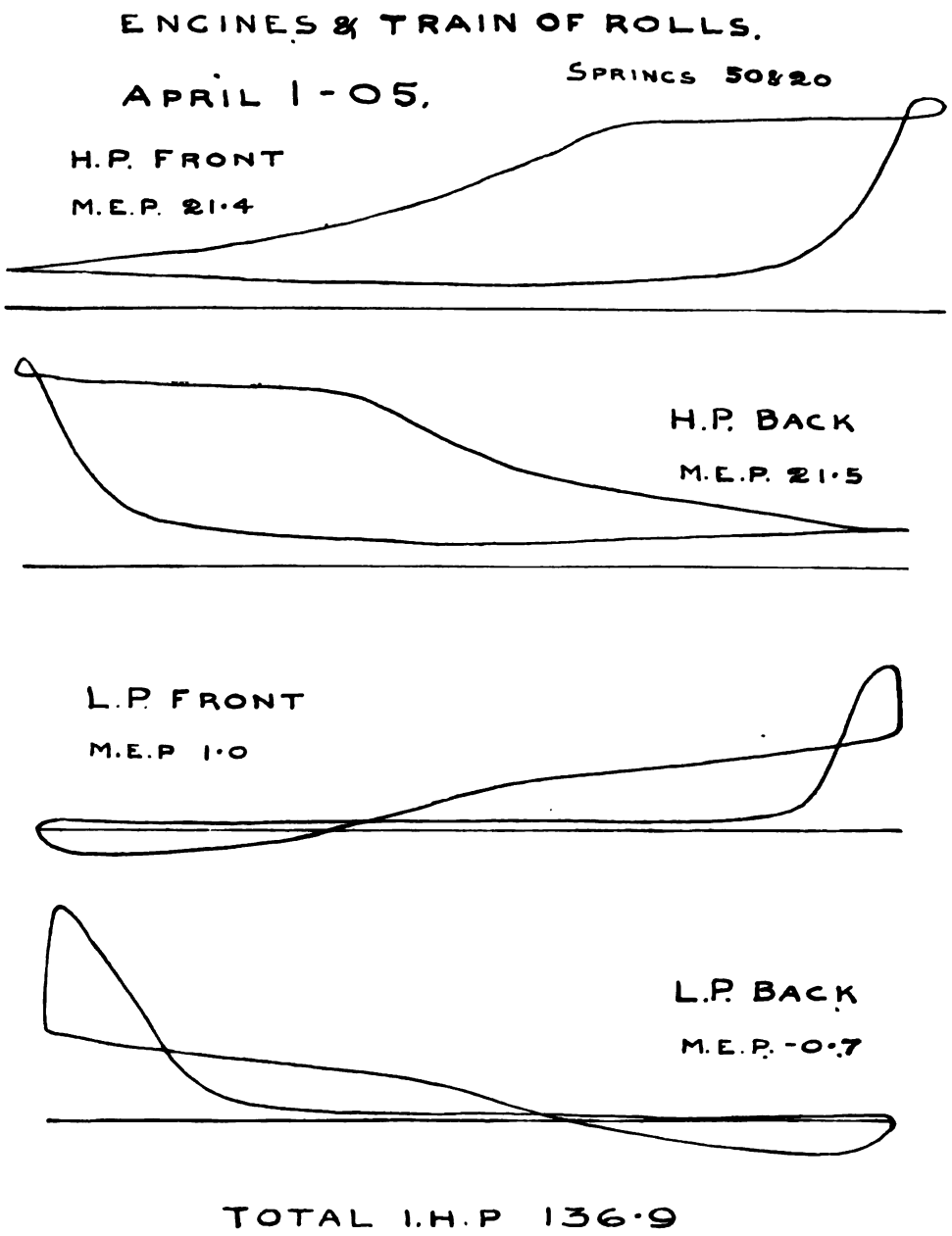
ENGINES & TRAIN OF ROLLS.
APRIL 1-05.
SPRINGS 50&20
H.P. FRONT
M.E.P. 21·4
H.P. BACK
M.E.P. 21·5
L.P. FRONT
M.E.P 1·0
L.P. BACK
M.E.P. -0·7
TOTAL I.H.P 136·9

FIG. 3.

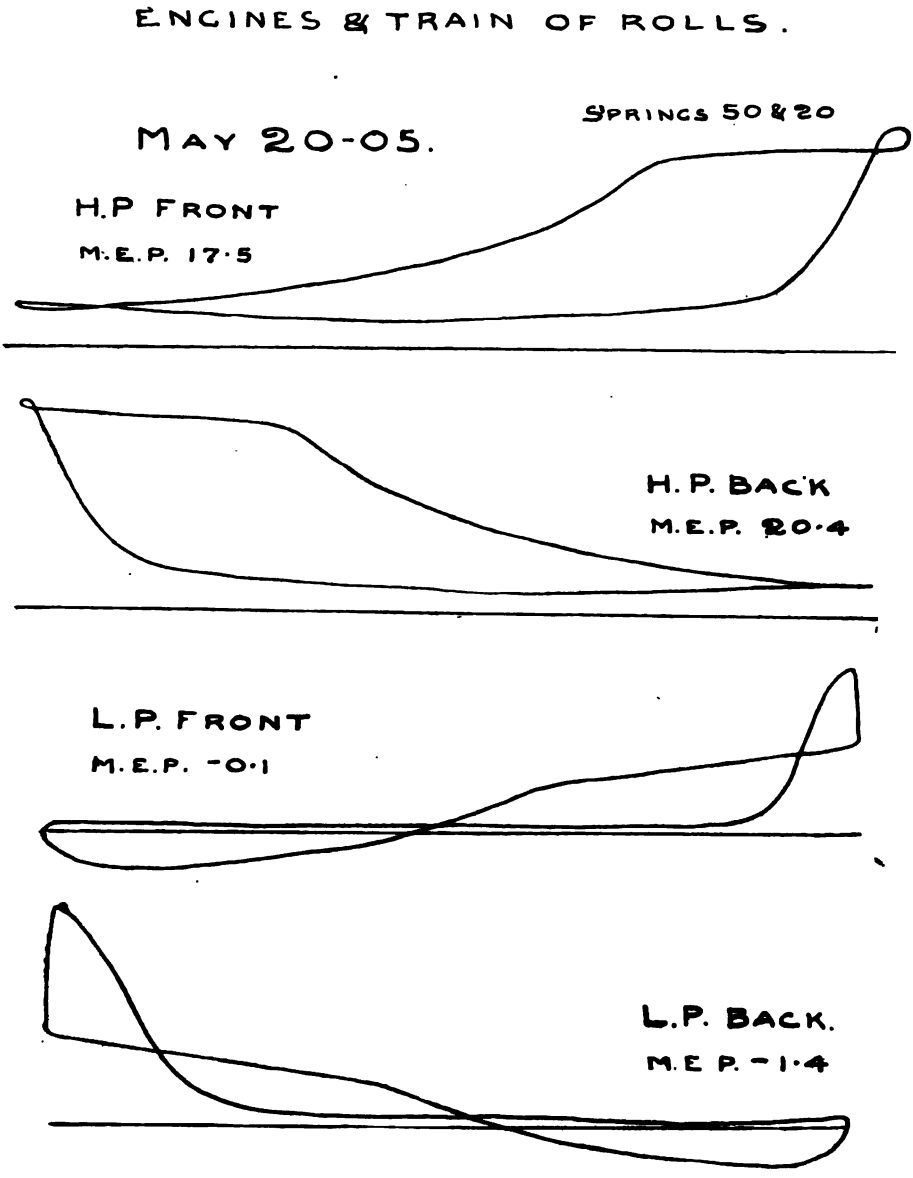
ENGINES & TRAIN OF ROLLS.
SPRINGS 50 & 20
MAY 20-05.
H.P FRONT
M.E.P. 17·5
H.P. BACK
M.E.P. 20·4
L.P. FRONT
M.E.P. -0·1
L.P. BACK.
M.E.P. -1·4
TOTAL I.H.P. 107·1

FIG. 4.

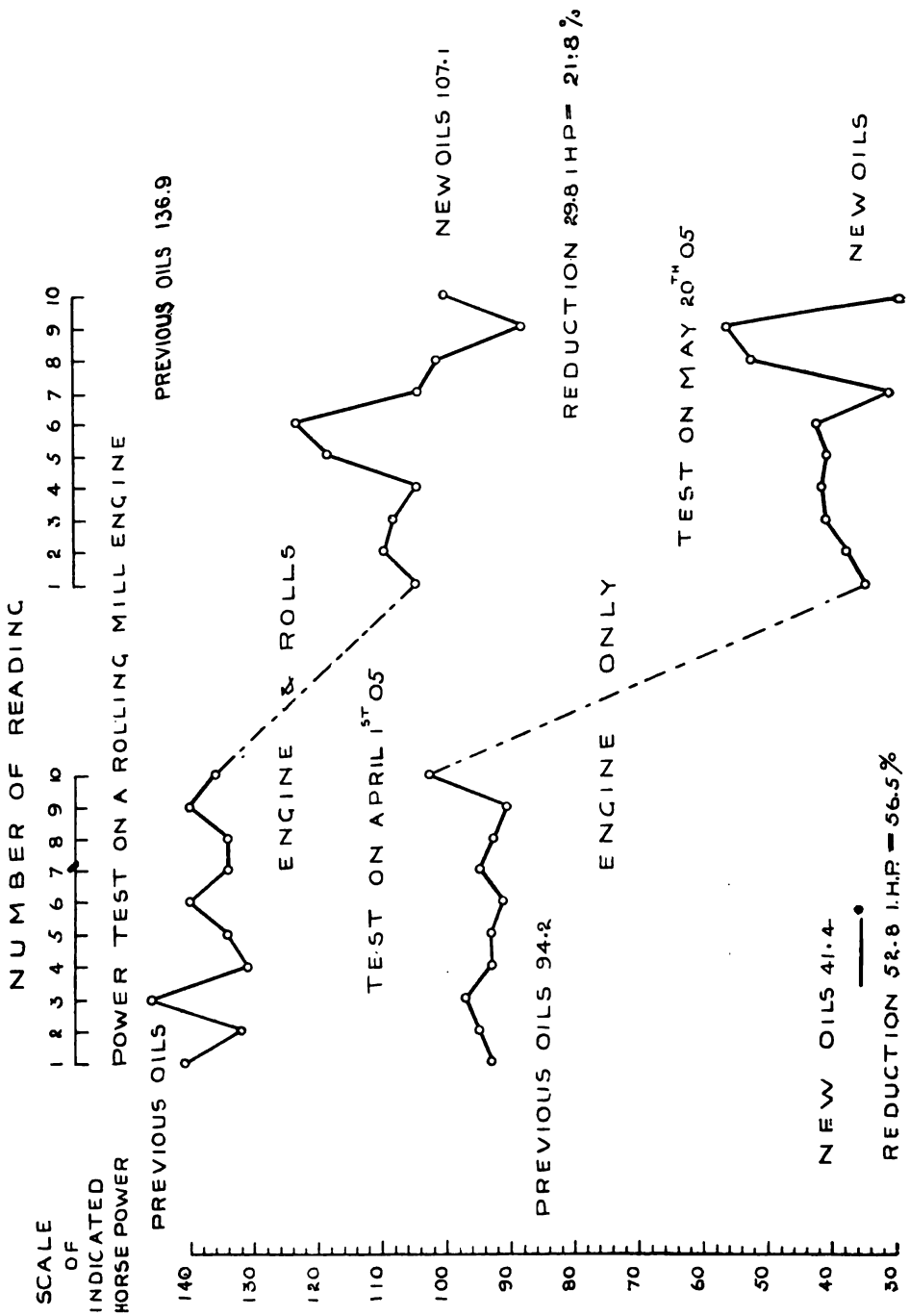
NUMBER OF READING
1 2 3 4 5 6 7 8 9 10
POWER TEST ON A ROLLING MILL ENGINE
PREVIOUS OILS 136.9
NEW OILS 107.1
REDUCTION 29.8 I.H.P. = 21.8%
ENGINE & ROLLS
TEST ON APRIL 1ST 05
TEST ON MAY 20TH 05
NEW OILS
PREVIOUS OILS
ENGINE ONLY
PREVIOUS OILS 94.2
NEW OILS 41.4
REDUCTION 52.8 I.H.P. = 56.5%
SCALE OF INDICATED HORSE POWER
140 130 120 110 100 90 80 70 60 50 40 30

FIG. 5.

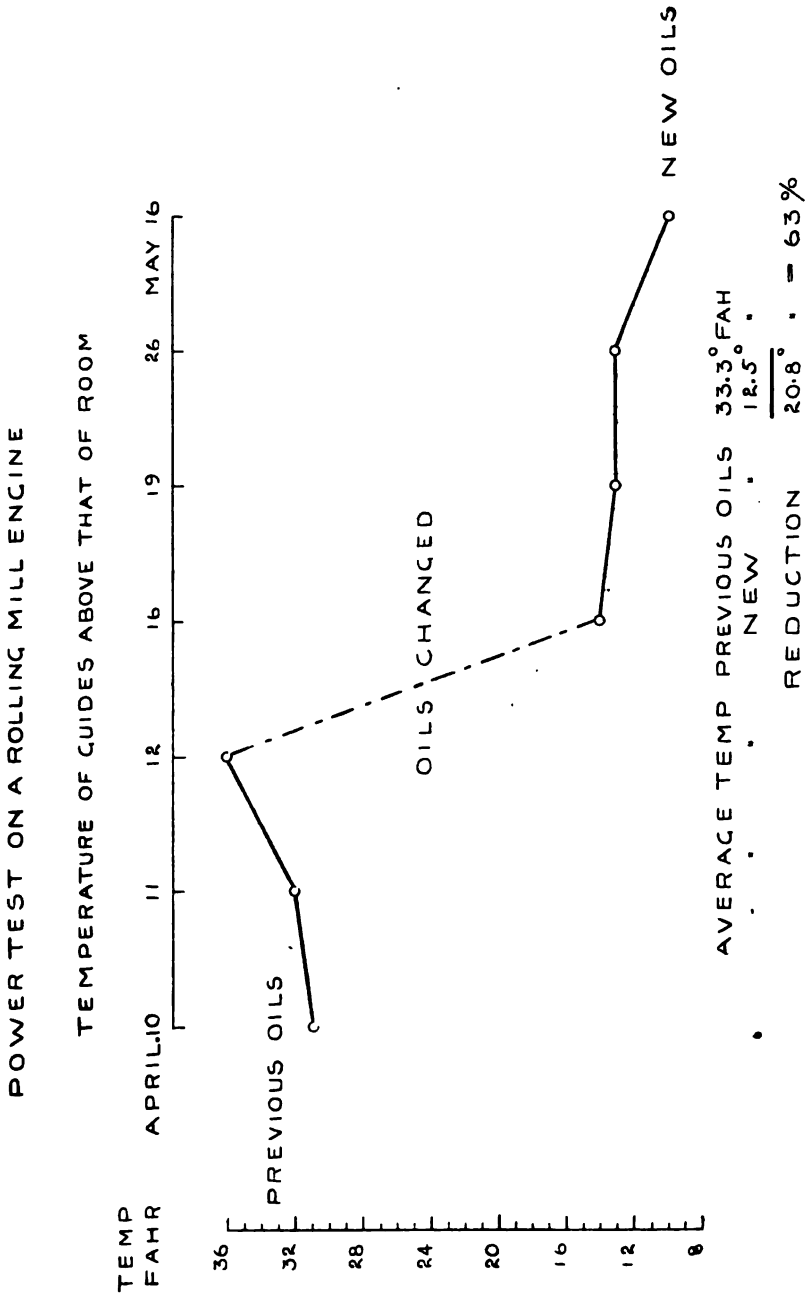
POWER TEST ON A ROLLING MILL ENGINE
TEMPERATURE OF GUIDES ABOVE THAT OF ROOM
TEMP FAHR
36
32
28
24
20
16
12
8
APRIL 10
11
12
16
19
26
MAY 16
PREVIOUS OILS
OILS CHANGED
NEW OILS
AVERAGE TEMP PREVIOUS OILS 33.3° FAH
NEW " " 12.5° "
REDUCTION 20.8° " = 63%

FIG. 6.

DISCUSSION.

Mr. F. McKenna said—I think we are all indebted to Mr. Parish for his very interesting paper. I would like to draw attention to one matter, namely, the corrosive properties which seem to exist in some lubricating oils and which has been found to produce very deleterious effects on white metal bearings. Would Mr. Parish inform us whether the oils alluded to in his paper contain any of these properties?

I heard the other day an interesting little story about some lubricating oils supplied to a certain colliery which so corroded the axle bearings of the tubs as to make it almost impossible for the pit ponies to drag them. We should like to hear what Mr. Parish has to say on this question.

The President said—That will conclude our business for to-night, and I am sure, as we are coming near the festive season, you will allow me, in the name of Lord Armstrong, to wish you all a very merry Christmas, and I trust we shall all have a prosperous New Year.

The President's wish having been responded to by cordial applause, the meeting dissolved.

NORTH-EAST COAST INSTITUTION OF ENGINEERS AND SHIPBUILDERS.

TWENTY-SECOND SESSION, 1905-1906.

PROCEEDINGS.

THIRD GENERAL MEETING OF THE SESSION, HELD IN THE LECTURE HALL OF THE LITERARY AND PHILOSOPHICAL SOCIETY, WESTGATE ROAD, NEWCASTLE-UPON-TYNE, ON FRIDAY EVENING, JANUARY 26TH, 1906.

W. G. SPENCE, ESQ., VICE-PRESIDENT, IN THE CHAIR.

The SECRETARY read the minutes of the previous general meeting, held on 15th December, 1905, which were confirmed by the members present and signed by the Chairman.

The CHAIRMAN appointed Mr. E. J. Crozier and Mr. A. Harrison to examine the voting papers for new members, and the following gentlemen were declared elected:—

MEMBERS.

Lopez, Jose, Ship Draughtsman, 54, Dene View, Wallsend-on-Tyne.
Macdonald, Thomas, Engineer, 5, York Street, Glasgow.
Sedcole, James, Engineer Draughtsman, 21, Springbank Terrace, Aberdeen.

GRADUATES TO MEMBERS.

Andrew, John Davies, Engineer, 33, Osborne Road, Newcastle-upon-Tyne.
Jenkins, Hammond B., Engineer, 5, Holmside Place, Heaton, Newcastle-upon-Tyne.
Leitch, John S., Ship Draughtsman, 114, Heaton Road, Newcastle-upon-Tyne.

GRADUATES.

Binns, Oswell Barritt, Engineer Apprentice, 21, St. Thomas' Crescent, Newcastle-upon-Tyne.

Brandt, Ferdinand Hans Christian, Ship Draughtsman, 271, Albert Road, Jarrow.

MacDonald, Hector Duncan, Engineer Apprentice, 5, Park Parade, Westmorland Road, Newcastle-upon-Tyne.

Smith, Thomas, Electrical Engineer, 15, Eslington Terrace, Newcastle-upon-Tyne.

The discussion on Mr. C. Schofield's paper on "Pneumatic Tools as Applied to Ship Construction" was resumed.

The discussion on Mr. W. F. Parish's (Jun.) paper on "The Engineering Value of Lubricating Oils" was resumed.

RESUMED DISCUSSION ON MR. C. SCHOFIELD'S PAPER ON "PNEUMATIC TOOLS AS APPLIED TO SHIP CONSTRUCTION."

The following communication from Mr. David Andrew, Jun., was read:—

January 5th, 1906.

DEAR MR. DUCKITT,

As circumstances prevented me being present at the meeting when Mr. C. Schofield's paper on "Pneumatic Tools as applied to Ship Construction" was under discussion, I wish to draw your attention to the defective riveting of the American-built steamers "St. Louis" and "St. Paul," which required renewal at considerable cost some years ago at Southampton, and as it is generally understood on this side of the Atlantic that these vessels were to some extent pneumatically riveted, it would be no doubt interesting to know if Mr. Schofield can throw any light on the subject and explain to what extent this class of riveting was involved.

Trusting this communication is not too late.

Yours faithfully,

DAVID ANDREW, Jun.

MR. SCHOFIELD'S REPLY.

Mr. SCHOFIELD said—In replying to the questions raised by the several members who took part in the discussion of my paper on "Pneumatic Tools as Applied to Ship Construction and their Advantages to Shipbuilders and Engineers," I shall take the questions in the order in which they appear in the discussion.

Mr. James L. Twaddell, in opening the discussion, remarked that the discussion of a paper should be more interesting than the paper itself, which is perfectly true. In fact, a paper when read is only the foundation on which to build a discussion, and thrash out the points of interest contained in the subject which is the basis of the paper.

I am rather surprised that this paper, which should be of such vital importance to shipbuilders, has not been more severely criticized, because there is scarcely a single paragraph in it which does not furnish sufficient matter for a whole evening's discussion.

The first point raised by Mr. Twaddell is the size of gunwale, tank margin, bulkhead bounding and other bars that have to be caulked. In America all such bars, when caulked by hand, have to be ordered with flanges wide enough for either planing or chipping, after which the bars must still be of such size as to conform to the requirements of the Government, or the classification society, as the case may be. But since we commenced using pneumatic tools for caulking, and dispensed with the planing and chipping of bars to be caulked, we have been allowed to order the bars the same size as though they had not to be caulked. This is a decided advantage to shipbuilders in more ways than one. In the first place, a draughtsman may easily forget to add to the bar the extra width necessary for either planing or chipping, thus often causing a serious delay. Secondly, it facilitates matters very materially at the rolling mill, when they can roll the bounding bar on the caulking side of a bulkhead the same size as the compensation bar on the opposite side; otherwise they have to change the rolls, which often delays the delivery of material for weeks. Then, again, there is the time lost and the expense of planing the flanges of the bar.

Mr. Twaddell, when speaking of drilling, informed us that at their yard they are using the combined drill and tap. This is a very useful and economical tool, and was first introduced in America on work for the electricians on Government vessels in conjunction with a pneumatic breast drill, and, later on, for heavy work in the shipyard and boiler shop. There is also a combined drill and countersink used on torpedo boat work, and a combined rimer and countersink on all heavy work. These appliances, in conjunction with pneumatic drills, all aim at reducing the cost of production, but conditions have to be taken into consideration. The United States Government, when placing orders for the building of battleships, etc., state in the specifications supplied to prospective bidders that all holes must be punched a size smaller than the hole is to be when finished,

and then rimered out to the full size: thus there is a great deal more of this kind of work done in the American yards doing Government work than there is in a British yard. Then again, the Government specify that no drift pins shall be used, so it is very evident that a combined rimer and countersink is an economical tool.

While I did not mention the fact in my paper, I may say we experimented with magnets, not only in connection with drills but also with shell riveting devices, and, to a certain extent, found them successful. We discarded their use on all shell work after we had had several minor accidents caused by the wires being tampered with (either accidentally or through ignorance), which caused a short circuit; but we still use them in connection with drills in cutting out ventilator and other large holes in the protective and heavy deck plating. We also use a magnet to hold the pneumatic annealer on casemate armour, etc.

With regard to the riveting by compression riveters. I do not seem to have made myself very clear on this point. In my paper, when referring to the compression riveter, I did so under the head of portable pneumatic riveting. While we had our pneumatic riveter suspended from a jib crane, which was permanently fixed in the yard, with a radius travel sufficient to cover the whole of a transverse frame when assembled on skids, we did not consider this a portable machine, and I referred to it in my paper as a "stationary riveter of the ordinary type." When we first attempted to drive rivets on the ship by pneumatics, we only had the compression riveting machine mentioned above, and, on account of it being so very heavy, we had to support the hammer by methods suitable to the various parts of the vessel being riveted. Every device we tried had to be rigid and strong, on account of the excessive weight of the riveting machine, and was consequently cumbersome and therefore proved too expensive to be considered successful, and it was only after repeated failures that we turned our attention to the pneumatic hammer of the reciprocating type, as mentioned on page 21 of my paper. Just at this time we were building a battleship and a cruiser for the Russian Government, also a battleship for the U.S. Government. The latter was to take the place of the U.S. battleship "Maine," which was blown up in Havana harbour. All these vessels were built on the cellular system of

inner bottom framing, having continuous longitudinals, which of course necessitated the floor plates being sectional, with corner angles connected to the longitudinal plates. This system of construction causes fully sixty per cent. of the rivets in the inner bottom framing to be driven single-handed when driven by hand, and extra money is paid for this class of work, in addition to the usual list price for ordinary riveting.

It was on the above-mentioned vessels that we introduced the pneumatic jam riveting hammers and pneumatic holders-on. We had been paying 14s. 8d. per 100 for ¾-inch rivets on this class of work when done by hand, but we only paid 5s. 3d. per 100 for rivets driven by pneumatic tools on these vessels, the latter rivets being much better driven than the former.

It was on the above three vessels that we experimented with rubber hose and hose connections. We had on trial several makes of rubber hose, from three to eight ply, both plain and armoured. The lower-priced grade of hose we found to be the most expensive at the end of the year, chiefly on account of the inner tube cracking and peeling. In several instances, after the inner tube had cracked, it was forced by the air pressure to one end of the hose, and of course choked it. We found this occurred more frequently in summer than in winter. This was not the only trouble, for we found that the oil necessary to keep the compressor working smoothly was often splashed into the air cylinders and thence conveyed through to the hose, thus causing it to rot. This occurred to a greater extent in some makes of compressors than in others, and I have been informed quite recently that some of the later makes are being fitted with strainers to prevent this, and no doubt some of the above causes contribute to the trouble which Mr. Twaddell found with regard to the upkeep of his hose.

The several kinds of hose couplings used are mostly of a pattern designed in the shops of the various shipbuilders and others using pneumatic tools. But the most efficient and economical coupling on the market is one that can be coupled up instantaneously, and is so designed that there are no projecting parts on the exterior which would foul the edge of plates, angles, etc., when the hose is being drawn from one part of the ship to another. Badly designed couplings are frequently the cause of great loss in power, owing to a slight leakage. In the case of

a large installation, where a great number of couplings are used, this is a serious matter, as it impoverishes the supply of air to the various tools, and consequently the efficiency of the latter is decreased.

The pneumatic wood deck planing machine is the greatest labour saving device yet put on the market, being able to accomplish more work than ten men, and, as Mr. Twaddell remarked, it is a much better machine than the electrical one. The pneumatic wood deck planing machine is absolutely a mechanical planer, which may be conveniently used in shipyards and like places where pneumatic drills are used, and may be easily moved about the deck by one man; the chief advantage of the pneumatic over the electric planer being that it will plane close up to a house or hatch coaming and finish the planing of a deck completely, without requiring (as is the case with an electric planer) men to finish the corners and coamings, which are generally laid with a bevel. I fully agree with Mr. Twaddell's closing remarks, when he quoted the following regarding compressed air: "The more I see of its usefulness the more I am surprised it has been so long in coming, and that so few have taken it up now that it has come. It is a matter of such wide interest that people interested have only got to see it to be convinced of its utility."

Mr. J. G. Carter, speaking of pneumatic riveting, says that what has been done in America in the past can be done here in the future. There is no reason why the British shipbuilder should not improve on all that the American shipbuilder has done in the past, or is doing to-day, because the climate of this country is more suitable for pneumatic work than the climate of America, seeing that we do not get the extremes of heat and cold; the cost of producing power is less; the upkeep of a plant is bound to be less, and we can take advantage of the knowledge gained by the many experiments made in America, and avoid to a great extent the expense there is attached to experimenting with an unknown quantity. Seven years ago, when pneumatic tools were first introduced into the shipyards of the States, the tools were not nearly as perfect as they are to-day. With a British shipbuilder who contemplates installing a pneumatic plant it is different, because, as I said before, he can profit by the experience of others and buy only the latest up-to-date tools on the

market. So, with the same amount of energy on the part of those connected with shipbuilding in this country as was displayed by the shipbuilders of America seven years ago, we should not only do as well as they have done, but improve on it.

In proof of the above we have only to realize what is being done in our dockyards, where they have been using pneumatic tools for the past two years. Mr. Carter quoted that he had been informed by an Admiralty official that in one of the dockyards they have got to a very successful stage in all grades of riveting, even the shell work. And why is it that private shipbuilders have not got to that stage of perfection? Simply because, as Mr. Twaddell said, "no arrangement has yet been come to with regard to riveting, but each firm is working in its own way and doing the best it can." Which means, that there are only about three shipbuilding firms on the North-East Coast who attempt any kind of pneumatic riveting. Several pneumatic-riveting tests have taken place at Messrs. W. Gray and Company's shipyard, West Hartlepool, and Mr. A. McGlashan told me that a gang composed of one riveter, a holder-on and a heater boy had driven over a hundred ¾-inch rivets per hour in the tank top of one of their vessels.

Mr. J. H. Heck, in criticizing the information on the tests made between the pneumatic and electric drills mentioned in my paper, says, "it is only fair to consider, as far as the electric drills are concerned, that we really have no particulars of the conditions under which they were worked." This, in a measure, is true, and it might throw further light on the matter when I state, that at the time I made the test the electric drills used were of the latest type, and had only been in use about six months. The tests took place within a hundred feet of the power station, and the conditions under which the electric drills worked during the trials were exactly the same as had been in vogue previous to the tests. The pneumatic drills broke down four times and the electric drills eleven times, but this, at the time, did not influence us for or against either of the drills, because we knew that both the electric and the pneumatic were being run to their maximum capacity. I fully expected that some of our members who are electrical experts would, at this point, have had something to say in defence of the electric drills.

Again, Mr. Heck seems to be surprised that Mr. Twaddell

should say that he had found the pneumatic superior to the hydraulic riveter, the reason given being that the former was not affected by frost. I do not think that Mr. Twaddell intended to convey the impression that its not being affected by frost was the only point in favour of its superiority, although that in itself would be a good and sufficient reason to warrant Mr. Twaddell in making such an assertion. In making comparisons between compressed air and hydraulic for riveting purposes in the shipyard, the principal feature in favour of the former is its extreme mobility; in fact, this difference might be compared to the advantages of an electric driving plant over the old steam drive, now obsolete, in which mobility is a prime factor.

It is conceded that a pneumatic riveter will do more work than one driven by hydraulic power, and, as compressed-air power is more economical than hydraulic power, this is another strong point in its favour. The piping, under ordinary conditions, costs less for pneumatic and is more easily taken care of than that for hydraulic power. The pneumatic riveter drives a rivet that is thoroughly body bound, which fills the hole right up to the neck of the rivet. Now, a rivet driven thus is far superior to a hand-driven rivet, and is all that can be desired for ship work; therefore, the only advantage claimed for hydraulic is that it drives a stronger rivet than pneumatic, which is really not a consideration in this particular case. The bolting-up necessary in preparing work to be riveted by pneumatic is no more exacting than if it had to be riveted by hand, although I find many people who think differently and refer to it as a serious drawback to pneumatic riveting. It is well known, by all practical shipbuilders, that when the hanger-up in a shell squad of platers leaves a plate hung up on the ship the bolter-up of the squad puts in a sufficient number of bolts to hold the plate in position, and after the liner man has fitted the liners the platers' work is considered finished and ready for the riveters to take it in hand. But before the hand riveter can commence driving rivets he must finish the bolting-up, as the seams are not closed sufficiently by the plater for riveting, and therefore it will be understood that whether the riveting has to be done by hand or by pneumatics the bolting-up does not vary, the amount of work required in each case being the same.

Mr. Heck, in speaking of shell riveting, suggested that, when the structural arrangements of a ship are modified by flanging the plate edges internally, it will be a very simple matter to drive all the rivets by pneumatic: but I contend that it is possible, and also profitable, to drive all the rivets in a ship, constructed even as they are at the present time, by pneumatic. A ship built according to the ideas of Mr. Matheson, and advocated by Mr. Heck, could be riveted for about half the cost of the present style of ships, but their design would involve about fifty per cent. more caulking. Still, I am convinced that some modified method of structural arrangements in connection with ship construction will be in vogue within the next few years, because every shipbuilder, at the present time, is paying special attention to the designs of new vessels, with a view to lowering the cost of production to a minimum, both in labour and material. Take, for example, the Harroway-Dixon patent cantilever framed steamer, which has been designed, not only with a view of its great carrying capacity compared with its low tonnage, but principally on lines that will facilitate the handling of freight and at the same time ensure the maximum of strength. The design of the vessel is such that pneumatic tools can perform the greater part of the work at a minimum of cost, and, to take advantage of this, Messrs. Sir Raylton Dixon and Company have contracted with one of the leading pneumatic engineering companies to instal in their yard a complete pneumatic equipment, with capacity sufficient to take care of all the chipping, cutting, caulking and drilling, and also the majority of the inside riveting.

An installation of a pneumatic power plant of about 600 feet capacity, comprising a 600 feet steam-driven compressor of the latest type; a receiver complete with all connective mains and branch-pipe lines, with elbows and T's; thirty-five various pneumatic tools; rubber hose, hose connections, valves, cocks, unions, etc., would cost about £2,000. Such a plant would take care of all the chipping, cutting, caulking and drilling of a yard building four vessels annually of 5,000 tons each.

Regarding the upkeep of a complete installation, the following will convey some idea of the cost, the statement I am about to make being an average estimate:—

The interest on £2,000 at 5 per cent. in one year will equal	£100
To produce 100 H.P. at 25s. per day for 312 days will equal	390
Allowing for depreciation of plant, say 10 per cent., will equal	200
For the renewal of hose (average life nine months) allow, say	75
For incidental maintenance, renewals—oil, loose tools, etc., allow	225
And then the total annual cost of maintenance amounts to	£990
Now consider 80 per cent. of the tools to be in operation. Under such conditions the total earnings for twenty-eight tools, say at 14s. each per day, will be for 312 days ...	...£6,115

The maintenance, therefore, is at about 16¼ per cent. of the total earnings of the tools, and, therefore, in a plant of double this capacity, the percentage should be less than 15 per cent. This will also, I trust, satisfactorily answer Mr. Harold Thomson's questions on this subject.

Regarding the general uses to which compressed air can be put, there is no denying the fact that hoists for shipyard work can be operated more economically by compressed air than by either electricity or steam. This can be vouched for by every one who has made test comparisons; in fact, some have changed their old hydraulic hoists into air hoists. Again, how many of our local shipbuilders, after thorough test trials, have had changes made to their steam hammers, so that they can be operated by air, and they are doing this entirely in the interests of economy.

With regard to winches. I will cite a case that came under my observation some five years ago, when the Eastern Shipbuilding Company, of New London, U.S.A., commenced building the overhead conveyer they have over two large building berths. They had to erect a steel mast 140 feet in length, weighing over 25 tons, and it had to be stepped on a foundation which

was 8 feet above the ground-level. We only had in the shipyard, at the time, one steam winch and one electric winch, so we placed them tandem fashion, with the electric winch in the rear. We had two fourfold blocks fastened to the hounds of the mast, but, instead of taking the ends of the falls to the gypsy of the winch, we fastened two luff tackles to the falls and took the falls of the luff tackles, one to each of the winches, and, so that neither tackle should be unduly strained, we arranged to check the travel of each. But we found that the electric winch pulled more of the load than the steam winch, so we increased our boiler pressure from 75 lbs. to 90 lbs.—which was all we were allowed to put on the boiler—and when we had raised the mast to an angle of about forty degrees both the winches stuck, and we could get no more out of them. Up to this time the electric winch had done the most of the pulling, the steam winch apparently only taking in the slack, but at this point we found ourselves utterly helpless, with one end of the mast suspended in mid air. Our pneumatic engineer then suggested to me that he thought he could overcome the difficulty by disconnecting the steam and connecting the compressed air on to the steam winch and running the air pressure up to, say, 120 or 130 lbs. After a great deal of argument I allowed him to make the change, and, to my surprise, the steam winch, when run by air, pulled the entire load without any assistance from the electric winch whatever. The only difficulty we experienced, after the change was made, was that we had to wait at times for the pressure of air to come up. I think this will convince the most sceptical that Mr. Twaddell was justified in making the statements he did; at the same time it is, as Mr. Heck says, only by discussion that such points can be brought out in detail.

Mr. George Vardy asks me to explain how a prominent shipbuilder on the Clyde could turn out twenty per cent. more tonnage from the same building berths by the use of pneumatic tools. The firm in question has four building berths capable of taking large vessels, and, at the same time, their engine works were large enough to have the engines waiting, ready to be set up in the ships when they were launched; but during the busy times, when men were scarce, they often had vessels standing fully plated up without a single rivet having been driven in the shell. Then, again, they were troubled with a great deal

of bad weather, which helped to delay the progress of the riveting of the vessels, and often they had been compelled to put shell gangs on inside work so as to proceed with other work which the want of riveting was keeping back, and several times they had a couple of engines in the shop waiting for the vessels, for which they were intended, to be launched. Since they commenced using pneumatic tools this has not occurred. They explained that all inner bottom work was riveted by jam riveters, and all the chipping, cutting, caulking and drilling was being done by pneumatic tools. The managing director of the Schofield, Hagerup and Doughty Shipbuilding Company, of Grimsby, told me that although they had six shipbuilding berths they often had two steam trawlers all plated up without a rivet in any part excepting the frames, which had been riveted by hydraulic, and these vessels were in this condition for fully three weeks, while, had they had a pneumatic plant they would have escaped this serious delay. Of course this would not affect a shipbuilder who had sufficient building berths to cope with his engine department during busy times, but to those who suffer by being cramped for want of room it should appeal very forcibly.

In replying to the questions raised by Mr. David Andrew concerning the demonstration of shell riveting at Greenock about four years ago, which proved such a miserable failure, I beg to say that when the demonstration in question was talked of in America I advised the president of the Pneumatic Tool Company, who were making the demonstration, not to attempt it at that time, especially with men from the lake yards, because the shipyards in America that were driving shell rivets successfully were not using the same method of supporting the pneumatic riveter and the holder-on that it was intended to use at the demonstration in Scotland. In the first place, the finish of a shell rivet in Great Britain is different to the way a rivet is finished on the great lakes, namely: In the lake shipyards they simply plug the rivet in the hole, then cut off the surplus metal, and finally finish the point of the rivet to a convex shape by leaving the centre of the rivet full and laying the edges up level with the plate. Whereas, in the coast yards it is customary to finish the rivets exactly as they do in Great Britain. First, the rivet is plugged into the hole, the surplus metal cut off, and

then, when they have driven the second rivet to the same stage, they go back to the first rivet and finish by cutting in the edges and leaving the point of the rivet "full" (or convex).

The pneumatic shell riveting device used at the demonstration was of the old-fashioned type, being a pneumatic hammer which acted in the same manner as the plunger in a pneumatic holder-on. When a hot rivet was put into the hole to be driven, it would protrude about an inch and a quarter through the hole, consequently the pneumatic riveting device had to be suspended so that the face of the hammer (or flat face snap) would be below the point of the protruding rivet; but to put the riveter in operation the air would be turned on, which would force the hammer up to the point of the rivet, when it would start a reciprocating movement which would plug the rivet in the hole. Up to this point the old style riveter is not so bad, but after the surplus metal has been chipped off with a pneumatic chipping hammer they finish the rivet by cutting in the edges. Now the trouble begins. As I said before, the face of the hammer (or flat face snap) is about an inch and a quarter below the point of surface which the hammer is to strike, and, no matter how skilful and careful the operator may be, it is utterly impossible for him to strike the edge of the rivet as intended, because when the air is turned on the pressure is so strong that it jars the hammer from its position, the result being that the rivet point and the plate in the vicinity of the rivet is all cut up with the edge of the tool. All this trouble is overcome by the new design of shell riveter, which is fully described in my paper.

There was one other thing that contributed to make the demonstration a failure and that was the pneumatic holder-on. As Mr. Andrew said, it required an erection of planking or other material to act as a backing to the holder-on opposite to the end that was on the rivet. This backing was held up by supports about six or eight feet apart, and consequently there was sufficient spring in the planking, when the pneumatic hammer commenced operations, to allow the rivet to go back just enough for a tester to insert his feeler under the head all the way round the rivet. This trouble (which was a serious one) has been obviated by the spring dolly bar which is described in detail in my paper. I think that what I have said will explain the defects and the deficiencies of the demonstration, and that it

will prove how a complete failure was made of what might have been a glorious success, had modern improved appliances been used, and men secured to operate the tools who understood what was required of a riveter in a British shipyard.

Regarding the installation of pneumatic plants on vessels afloat, I have no doubt but that in the near future every ship will be equipped with a pneumatic plant, so that the captain can scale his vessel, both inside and out, scurf his boilers, and do any heavy drilling and chipping necessary to any part of the ship, whether in port or at sea. A plant consisting of a compressor, receiver, four hammers and a drill, with hose and connections would not cost more than, say, £200, so that the pneumatic plant on a vessel would pay for itself in one year. Then again, any temporary repairs under water, necessitating the use of a drill or a hammer, could be done more expeditiously by pneumatics than by hand.

Within the last year or two pneumatic tools have been used extensively in salvage work, where they have proved to be invaluable, especially when holes have had to be drilled under water. The old method of using a ratchet brace for this work is very slow and tedious. In a recent case, when the "Stromboli" and the "Kathleen" collided on the river Clyde near Greenock, the former had her bow and collision bulkhead stove in, the latter being struck amidships, thus making a V-shaped hole, about 40 feet wide at the top, extending round the bilge to within about 8 feet of the keel. The job of raising both vessels was given to the East Coast Salvage Company, Limited, of Leith, Mr. T. Napier Armitt being in charge. The "Stromboli" was quickly patched up, raised, and towed into dry dock for repair. In patching up the "Kathleen," oak timbers had to be bolted over the hole in the ship's side. T-bolts, as ordinarily used, would not have been sufficiently strong for the purpose. The salvage company, having a pneumatic plant on board, used a drill to bore the long oak timbers where the bolts had to go through into the shell of the ship, and between each two holes (there were about ten at each end, 1¼ inches in diameter) was fitted a one-inch bolt, with the head countersunk into the wood on the side towards the ship. These bolts were used for holding up an angle to back up a pneumatic drill. The holes, which totalled about sixty, were drilled through two, and sometimes

three, thicknesses of ⅜-inch metal, the average time being two and a half minutes per hole. Had the holes been drilled by hand with the ordinary hand ratchet, even if this had been at all possible, it would have taken the same number of hours. It should be emphasised that this work was carried out under water at a depth of from 18 feet to 25 feet. This salvage company were recently engaged in raising a 6,000-ton turret steamer which had sunk off Bordeaux. To raise this boat, timber bulkheads had to be built at the break, the water then being pumped out of each half. For supporting these timber bulkheads the different decks of the ship had a slot cut through, this cutting being done with a pneumatic chipping hammer and diamond-pointed chisel.

Mr. Armitt recently said that certain operations in salvage work, which would have been considered practically impossible years ago, are now made easy owing to the using of pneumatic tools.

In reply to Mr. D. Andrew, jun., of Glasgow, with regard to the riveting of the "St. Paul" and the "St. Louis," two ships of the American Line, which were built by Wm. Cramp & Sons, of Philadelphia, during the year 1895. I am surprised that anyone should associate the "St. Paul" and the "St. Louis" with pneumatic riveting, because the vessels in question were built and in commission fully three years before any pneumatic riveting was attempted in the Cramp shipyard, but the development of loose rivets in the "St. Paul" and the "St. Louis," all of which were hand driven, influenced the American Line officials to insert a special clause in the specifications for two vessels that Cramps built for them some three years ago, to the effect that all rivets should be driven by pneumatics. In justification to the builders of the "St. Paul" and the "St. Louis," it should be mentioned that these vessels were designed (under the direct supervision of the owner's naval architect) to run at a speed of 17 knots. The vessels would not have had the trouble mentioned if this speed had not been exceeded, but it was found that they were capable of making 20 knots, and it was through forcing them through heavy seas at this speed which caused them to develop this weakness. The inner bottom framings were afterwards strengthened at Southampton, and, at the same time, the shell plating in the vicinity of the weakness

was re-riveted. This will, I hope, clear away the misunderstanding some people have regarding the riveting of these two ships.

Referring to Mr. Thomson's remarks *re* tube cutting and expanding by the aid of pneumatic tools. This is carried on extensively on the North-East Coast. Tubing of practically any size can be cut in less than half the time it is possible to do it by hand. The pneumatic tube cutter is arranged for cutting out tubes, and cutting off the ends after the tubes have been put in and expanded. The rotary action is furnished by a pneumatic drill, whilst the feed of the cutter is derived from a wedge actuated by a piston travelling in a cylinder. In tube expanding a pneumatic drill is attached to the expander, the design of which is similar to those rotated by hand power. Tubes up to 3½ inches in diameter can very easily be handled when a pneumatic drill is used to drive the expander.

In closing I should like to thank those members who have been good enough to criticize my paper, and I trust that my answers to their criticisms will have made clear to them, and to the members of this Institution all those points on which they required information. As I remarked at the outset, I should have been more satisfied if the criticisms had been more numerous and more exacting, for pneumatic power has come to stay, and there is no shipbuilder, either in a large way or in a smaller degree, who can afford to be without it. True it is, that in the coming years many improvements will be made on the present tools and appliances, but it will not pay the shipbuilders of Great Britain to sit and wait for these improvements to come. The tools, as they are at the present time, are a very valuable asset to a shipbuilder, and it is by using them that improvements will suggest themselves to the minds of the workers. Indeed, the improvements to the tools themselves have reached a very high and satisfactory standard, and it is not so much that, which is required to make pneumatic power a complete success, as it is that improvement is wanting in the application of the tools. Shipbuilders who are using pneumatic tools can do much more towards making them a benefit to the shipbuilding world than can any pneumatic engineering company, and I may say that most of the improvements made in America since the introduction of pneumatics have been made by the shipbuilders, bridge

builders and others using the tools, and not by the representatives of the companies manufacturing them. It has been a great satisfaction to me to know that all who have taken part in the discussion are practical men and that they will therefore the more readily understand the advantages which must accrue from the installation of a pneumatic plant in their shipyards or works. I cannot think, however, that this discussion will end here, for there must be many points which could be more satisfactorily explained in detail; and therefore I shall always be pleased to enter into a private discussion with any member of this Institution, and if I can be of any service to them it will give me great pleasure to answer their questions to the best of my ability, and to give them any other help that lies within my power.

The CHAIRMAN (Mr. W. G. Spence) said—We have had a very exhaustive reply from Mr. Schofield on his paper, and, personally, I have much sympathy with anything in the nature of mechanical improvements in shipyards. In looking round a shipyard there generally seems to be plenty of room for it. Pneumatic tools having come to stay in boiler yards, I do not see why they should not stay in shipyards. I think our next duty will be to accord to Mr. Schofield a hearty vote of thanks for his paper, and I propose we do so by acclamation.

The motion was carried by hearty acclamation.

RESUMED DISCUSSION ON MR. W. F. PARISH'S (JUN.) PAPER ON "THE ENGINEERING VALUE OF LUBRICATING OILS."

Mr. D. B. MORISON said—I quite agree with Mr. Parish that lubricants and lubrication are important factors in the economics of machinery in motion, that they are often the sources of unsuspected and unappreciated loss, and that this loss can best be estimated and prevented by those who have given the subject careful study and who have gained a sufficiently varied practical experience to warrant them in assuming the title of lubricating experts.

That specialization in lubrication is amply justified is clearly proved by Mr. Parish, and it would seem that the services of such an expert are in greater request in America than in this country, probably because American manufacturers are more keenly alive to all the little economies which, in the aggregate, add to the respectability of a balance sheet.

Maximum efficiency naturally results from the use of an oil best adapted for any particular class of bearing, and also from the method of its application. In a textile mill, where a very large proportion of the power is absorbed by the friction of bearings and joints, the use of the most suitable oil may affect the power to a very considerable extent.

In engineering works in this district, especially those driven electrically, the influence of efficient lubrication is readily ascertainable, and would in many cases amply repay investigation.

Again, in the case of a steamship of, say, 1,000 I.H.P., with a mechanical efficiency of, say, 90 per cent., the effective horsepower may easily be affected to the extent of from 5 per cent. to 10 per cent. by unsuitable oil and unsuitable gland packing, which is equivalent to a loss of from 5 to 10 tons of coal per week. The lubrication of steam turbines is also of great importance, as a rapid rise in the circulating system immediately results from the use of an unsuitable oil.

In this country the prevailing system is for the commercial department to buy the oil, but if an inexperienced buyer could

only realize that the mixing of oils is a fine art in the oil trade, and that great ability is often displayed in making the quality fit the price, he would understand that in dealing with oil and oil merchants it is not difficult to be penny wise and pound foolish, and he would leave the selection of oils to the superintendent engineer, who is directly responsible for the efficiency of the plant on which it is used, and whose judgment is the result of prolonged practical experience.

In a paper I read before this Institution last session, I emphasised the fact that the highest efficiency can only be obtained by using the best oil, and that the difference in price between a common and a good oil is insignificant in comparison with the results which may be secured by using the highest and most suitable grade which can be obtained.

When dealing with the lubricants it is well to remember that oil is cheaper than friction, and that a small quantity of good oil gives better results than a large quantity of bad oil.

In my recent paper on "Oil in Boilers" I also drew attention to the fact that a large proportion of the oil used for the internal lubrication of cylinders and the swabbing of piston rods and valve spindles associates itself with the drainage water as float oil and oil in emulsion, and I have lately been testing various oils with the object of obtaining one which is efficient as a lubricant, and which when associated with drainage water will give a maximum of float oil and a minimum of emulsion. In response to requests for samples of drainage water I have been favoured with a large number from all sizes and types of marine engines, and it is an interesting and instructive fact that many superintendents in forwarding the samples have expressed surprise at the amount of oil they contained and also their intention of immediately dealing with the matter in the boats under their charge. It is the insidious nature of the problem which is responsible for its neglect, as although all thinking engineers realize that increased efficiency results from keeping engines free from water, yet this water has hitherto been led to the condenser in the ordinary way, and its analysis has been over-looked. Take, as an illustrative example, an engine of 1,000 I.H.P., with a water consumption of 14 lbs. per I.H.P. per hour or a total of 1,400 gallons per hour. Suppose the drainage from the I.P. and L.P. casings were automatically

trapped and that the combined discharge amounts to 45 gallons per hour (which is a conservative estimate), containing 30 grains of oil per gallon of water. If this drainage is passed into the condenser it will naturally mix with and contaminate the entire contents, with the result that the total feed water will contain 1 grain of oil per gallon, or fully 4 pints per 24 hours. It is not surprising, therefore, that this question is now receiving intelligent attention in all quarters where maximum efficiency is desired.

My investigations have been made on two identical engines in the power station at the Hartlepool Engine Works. The receivers are drained by Geddes' oil traps and each oil has been tested for a period of six weeks.

Mr. Morison exhibited a large number of samples of oils and emulsions, also casing drainage water and feed water from many types of marine engines. The emulsions obtained from various standard cylinder oils varied considerably, the richness in some being ten times greater than in others, thus proving his contention that of the standard grades of cylinder oils only some are suitable for swabbing.

The Chairman (Mr. W. G. Spence) said—What Mr. Morison has shewn us has come as a revelation to me. Curiously enough, I had an interesting experience the other day. We were fitting up, at the request of a superintendent, a drain from the exhaust tank into his fresh-water ballast tank under his engine room. I tried to persuade him that he had better cut that pipe off about six inches above the ballast tank and let the water go on the tank top instead of into it. He seemed to doubt the fact. We took off the cover of the exhaust tank, and what we saw inside should have been enough to convince anybody. On the surface it looked like a tankful of oil instead of condensed water, from some auxiliaries which had been exhausting into that tank for some time. This mixture was to be religiously stored away as a precious liquid, to be pumped into his boiler as occasion required.

Mr. Robert Henzell said—Unfortunately, I did not hear this paper read, but I take an interest in it because I am in the oil trade. Many years ago I was asked to read a paper on this

very subject before this and a kindred Institution, and I declined because I did not see quite how the paper would be interesting from the members' point of view unless I told them a lot of secrets in connection with the blending of oils which I did not want to give away, and that if I simply told them our oil was better than anybody else's it would not be very interesting. I was, therefore, interested to find a braver man than myself who would read a paper on the subject. I would like to ask the writer of this paper to give us a few more reasons other than those he has given here to explain his results. He says, "it is not necessary to give a treatise on the refining and manufacture of oils and the characteristics of the different lubricants." I rather wish he had done this. All he does is to call one oil "castor oil" and the other oil "new oil," and he goes on to say how much per cent. per day he has saved in this way. I should like him to tell us under what conditions these trials were made. For instance, the castor oil might be a very awkward oil in the arctic regions, and you might easily find another oil more suitable there, but castor oil in the Red Sea might be a very useful oil indeed.

The same thing applies exactly in his remarks on cylinder oils. There is a most remarkable result given here. "On a 2,500 horsepower engine it was necessary to pour 1½ gallons per eight hours shift at 5s. 6d. per gallon. A change was made to another oil, and the consumption was reduced to three-quarters of a gallon. The condition of the engine was greatly improved, though no figures of friction could be secured." Then he goes on to say the reduction was 50 per cent., or something of that sort. I would like to know from him what the people who were paying 5s. 6d. a gallon were getting—whether they were getting oil or coal tar? Because it seems to me a saving like this on a cylinder oil at 5s. 6d. per gallon from any respectable firm in England is too much like a fairy story. His figures may be correct, but he gives us no data to go upon; no detail as to pressure in the cylinder, whether super-heated steam was used, and why this other oil at, say, 2s. 6d. per gallon was so much superior to the oil at 5s. 6d. As one in the trade, I should like to know from this gentleman—I am rather disappointed in his paper, as I expected to get a fund of information from it—why this oil at the low price is so much better than the the oil at 5s. 6d.

per gallon, and the conditions under which this oil was tried. I know in one case my own firm was asked to supply a cylinder oil to take the place of another firm's, and when our representative went to the works to see the oil applied he found the lubricator was feeding fifteen drops to the minute. He reduced the supply to five drops a minute, which was all that was necessary, but it would be scarcely fair to say that, as compared with the previous oil, we had reduced the cost 200 per cent. It was simply a question of the man putting fifteen drops a minute into the cylinder when he should only have put in five drops. Therefore I should like to have more details as to the test referred to in the paper.

At the beginning of the paper there is mention of a lubricating engineer. Is this a new profession and has he secured these results? In our own firm we employ a gentleman who is an engineer and a chemist, and we call him our expert. It is his duty to advise people what oils to use, and how to use them. If you at your works give us and our expert a free hand we will prove anything to you. We will not only prove that one oil is much better than another, but we will give any results you want. The only conditions we ask is that we have a free hand in the matter. I could understand the object of this paper, if it was written by some one who was trying to advertise any special oil. If that was so, I would immediately say that the object as an advertisement might be smart, although not very complimentary to this Institution. As, however, this is not the case, I thought the writer would be able to give us a little more information than he has done in the paper, that is, to tell us why one oil is so much better than another. That is what I want to be at. It is no use asserting without giving reasons and proof. I want to know what are the virtues and characteristics of an oil that make it so much better than others. I think if, in his reply, Mr. Parish would tell us this, it would certainly be information to me, and, I believe, to the members of the Institution.

Mr. F. P. Clarke (Middlesbrough), by permission of the meeting, said—What I want to say is not exactly a discussion on Mr. Parish's paper, but I want to elicit a certain amount of information which would be interesting to all of us, dealing with the very difficult question of oil lubrication. That is to say

would like to know if it is possible to make a comparative lubricating test on a turbine from the economical point of view—from the fuel end right through to the other end, considering the output of horsepower? Also, what Mr. Parish's views would be as to the economical efficiency of oil *versus* grease for the lubrication of the engines of steamships and mills? Another great point that comes before us is the lubrication of gas engines. That is to say, whether, taking the type of engine known as the gas-blowing engine, the one oil should be used universally through the air cylinders and the gas cylinders, and also on the bearings, or whether the use of three separate oils would be considered better practice.

The following communication was read by the SECRETARY:—

December 15*th*, 1905.

DEAR MR. DUCKITT,

I regret that I will be unable to attend the reading of Mr. W. F. Parish's paper on lubricating oils, but would like to ask Mr. Parish if he has had much experience with lubricating oils as applied to petrol engines for motor cars, as this is a subject which a good many of our members will be more or less interested in now.

The views of Mr. Parish will, I have no doubt, be much appreciated. Personally, I have had some difficulty in getting hold of a good lubricating oil suitable for this purpose; and have found that different makes of petrol engines require different treatment in this respect.

Yours faithfully,

FRANK LITTLE.

The discussion was adjourned.

The meeting then dissolved.

NORTH-EAST COAST INSTITUTION OF ENGINEERS AND SHIPBUILDERS.

TWENTY-SECOND SESSION, 1905-1906.

PROCEEDINGS.

THE FOURTH GENERAL MEETING OF THE SESSION WAS HELD IN THE LECTURE HALL OF THE LITERARY AND PHILOSOPHICAL SOCIETY, WESTGATE ROAD, NEWCASTLE-UPON-TYNE, ON FRIDAY EVENING, FEBRUARY 16TH, 1906.

W. H. DUGDALE, ESQ., VICE-PRESIDENT, IN THE CHAIR.

The SECRETARY read the minutes of the previous General Meeting, held in Newcastle-upon-Tyne, on Friday, January 26th, 1906, which were confirmed by the members present, and signed by the Chairman.

The CHAIRMAN appointed Mr. A. Harrison and Mr. J. Watt Sandeman to examine the voting papers for new members, and the following gentlemen were declared elected:—

MEMBERS.

Gray, Tom Leonard, Elec. Engineer, 18, Grainger Street West, Newcastle-upon-Tyne.

Sayer, Henry, Foundry Manager, Walker Iron Foundry, Walker-on-Tyne.

Wright, Joseph, jun., Foundry Manager, 7, St. Mary's Place, Newcastle-upon-Tyne.

GRADUATE TO MEMBER.

Dickinson, Thomas, Shipbuilder, 105, High Park Road, Newcastle-upon-Tyne.

GRADUATE.

Race, Allan, Apprentice E. Draughtsman, 7, Ravensworth Terrace, Gateshead-on-Tyne.

The discussion on Mr. W. F. Parish's paper on "The Engineering Value of Lubricating Oils" was resumed and closed.

Mr. J. M. Moncrieff, C.E., read a paper on "Commercial Dry Docks."

RESUMED DISCUSSION ON MR. WILLIAM F. PARISH'S (JUN.) PAPER ON "THE ENGINEERING VALUE OF LUBRICATING OILS."

Mr. G. D. WEIR said—As one of the members of the Reading Committee of the Institution, when this paper first came before my notice it appeared to offer a very wide field for investigation and discussion, and I am sure that Mr. Parish deserves the best thanks of our members for the very able and lucid way in which he has brought this important subject before us.

On the first page of Mr. Parish's paper (61), he says that it is possible to manufacture lubricants so that they will contain a maximum amount of lubricating power, and that by the use of these lubricants a reduced horsepower reading of the machine can be obtained if proper care is used in selecting the lubricant. This statement, I think, forms the keynote of the paper, and in my opinion it is one which should be carefully noted by all those in charge of or associated with large factories where there are many hundreds, or even thousands, of feet of shafting running and requiring lubrication. There is, I fear, a very common practice in large works to leave the ordering of the oils to probably one of the commercial staff, who sends the orders to an oil merchant who has never studied the question in any way; with the result that the manufacturer receives oil which is certainly not the best suited for the purpose, and which, if he were to carefully analyse the cost, he would find, though saving 1d. or 1½d. per gallon in the first instance, the oil was actually costing him many hundreds of times this amount.

In the olden days, when factories were driven by steam, the works manager in his rounds of the shops felt that he was not getting the maximum output from his factory, and very often blamed either the coal with which the boilers were fired, or the firemen themselves; but now that we have a great many of our works electrically driven, where each department or machine is driven by an electric motor, the current absorbed or used in doing the work can be very accurately measured, and the question of the lubrication of the machines and shafting is one which can be very easily inquired into.

Mr. Parish gives in his paper the results of a number of tests conducted, and it may be of interest to the members to put on record another test which has recently been made, and which I consider exceedingly interesting. For the purpose of this test a line of shafting, driven by a 15 horsepower motor, was used. The shafting was about 150 feet in length and 2¼ inches in diameter, and supported by fourteen hangers or bearings; and the countershafts driven from this line of shafting were a total length of 132 feet and supported by 60 hangers. The machines driven from these shafts consisted of lathes, drilling machines, emery wheels, grindstones, etc. A portable meter, which registered exactly the quantity of current used by the main driving motor, was fitted, and readings taken at six o'clock every morning and at five o'clock every evening for a period of two weeks, under the usual conditions at which the shafting was run, and with an oil which is commonly supplied for shafting work, and which we may designate as shop oil. The total number of units used in the fortnight amounted to 1,180; at the end of this time the oil was taken from all the receivers, and the amount carefully measured, and the receivers filled with another class of oil, which we will call special oil. One week was allowed in order that all trace of the shop oil might be removed and the bearings thoroughly flushed out with the new oil, during which week no readings were taken on the meter, but at the end of that time the meter readings were carefully recorded for the following fortnight, which gave a total of 890 units used. The difference, therefore, between the number of units used under the shop oil conditions and the special oil conditions was 290, which represents a saving of 24 per cent., and as we may take for comparative purposes the cost at which public supply companies are selling their electrical power, say at 1⅛d. per unit, the saving alone on this small department during the fortnight would have amounted to £1 7s. 2d. or £35 6s. 4d. per annum. The quantity of shop oil used for the fortnight was 1 gal. 3 qrts. 1pt., and of special oil, over a similar period, 2 gals. 1 qrt. 1½ pts., or a difference of 4½ pints more in the case of the special oil. But as the cost of both oils was practically the same, that is, about 1s. 6d. per gallon, and as the shop oil was of a heavy nature and therefore the lubricators were arranged to suit this oil, I do not think that the quantity

of oil used need enter much into the calculations, especially as the amount of the special oil used, namely, 4½ pints, used in excess of the ordinary oil, only cost about 1s. more or 26s. per year, or a gross saving of £34. These figures were most astounding, and on making enquiry I find that the general opinion of those gentlemen who had been following the tests very carefully was that the special oil had a cleansing property in it which they considered accounted for the difference, particularly as I was informed that when this oil was first used a large amount of sticky or resinous substance came away from the bearings. Obviously, therefore, to get at the exact truth, it was necessary to make a further test with the shop oil, so that a second test was started under which the condition of the bearings would be the same as they were with the special oil used. The readings of the meter were then taken daily for another fortnight, and it was surprising to note that the daily readings gradually increased until at the finish of the fortnight the amount of the electricity consumed per day was almost the same as the amount which was being consumed before the tests were started at all. This appeared to prove that without doubt the oil which had been in use for lubricating the shafting was not the best suitable, unless the amount of power required to drive the machinery in that shop fluctuated considerably; and to prove this it was decided to make another trial with the special oil. For a week previous the bearings were thoroughly flushed with the special oil, so as to get rid of the shop oil, and the meter readings again taken for a fortnight, when it was found that the quantity of current used was practically the same as in the previous test made with this oil. The saving effected was 14 per cent. as against 24 per cent. in the previous case, this being entirely accounted for by the bearings being in a much better condition for the second test with the shop oil than they were in the first instance. Taking these figures, therefore, and allowing for a corresponding saving throughout a factory installed with motors using 1,000,000 units per annum, and assuming the saving of 14 per cent. over and above the shop oil when the bearings were in a very clean and most efficient condition; assuming that the cost per unit was, say, 1⅛d., then the saving alone would amount to £656 per annum, or, in other words, where a manufacturer is buying his power from an outside company, by the

ordinary means of lubrication, or without any special apparatus, but simply using oil which has been specially manufactured to contain the maximum amount of lubricating power for the particular purpose for which it is used, a saving amounting to over £650 per annum would be effected. Of course it might be necessary to set against this some special reservoir arrangement, as I believe that the special oil for shaft bearings would not be suitable for, say, the heavy slides of the planing machine. Although I do not know of any definite experiments having been made in connection with this, yet it is possible that it might be necessary to have two or three different qualities of oil for the different purposes for which they would be used throughout the factory, but the enormous saving shown above would amply compensate for the extra cost of the tanks, and the extra care used in distributing the oil.

In order to still further prove that the figures given were reliable, further tests were made: first, by four runs each of 20 minutes' duration with the motor driving the main shafting only; in other words, all the clutches which operated the machines were taken out and the belts were put upon the loose pulleys of the counter-shaft. With the shop oil the average revolutions per minute of the shaft were 124, and the revolutions of the motor 606: and four similar tests of the same duration, and under the same conditions, were made with the special oil, when the average revolutions of the shaft were 125, and of the motor 612. From the increased speed of the motor and the shafting it would appear that they were more easily driven, and on measuring the amount of current used with the special oil the reduction was 14 per cent.

A further series of four tests were made with all the machines running light on their top speeds with the shop oil, when the revolutions of the shaft were found to be 117, and the revolutions of the motor 577. Four similar tests were made with the special oil, the revolutions of the shaft being 120, and the average revolutions of the motor 590, again showing that with the special oil the shafting was running more freely, which accounts for the slightly higher revolutions; but the saving in current by using the special oil was equivalent to 25 per cent.

In conclusion, therefore, it would appear that of the four pairs, or eight independent and separate tests made, namely,

with the motor driving the main shafting only, the special oil gave a saving of 14 per cent.; with all the machines on, and running at their highest speed with the special oil, a saving of 25 per cent., or a total saving in current, during the whole time these tests were being made, of 22·8 per cent. And this practically agrees with the saving shown on the full-load tests, which, as previously mentioned, worked out between 14 per cent. and 24 per cent. of the total power used in driving the machinery in that particular department. When such results as these are shown it proves, to quote from Mr. Parish's paper, "the necessity and advisability of developing the lubricating business along engineering lines," and that the work of a thoroughly trained and practical man, making a speciality of this business, must be extremely interesting, and the data obtained most valuable.

I again thank Mr. Parish on behalf of the members for his most interesting and valuable paper.

The SECRETARY read the following communication:—

DEPTFORD YARD,
SUNDERLAND,
February 26th, 1906.

DEAR MR. DUCKITT,

As I was unfortunately prevented from attending the discussion on Mr. Parish's paper with reference to lubrication, and as I have made experiments in this direction at this yard very recently, I trust that I may be allowed to add a few remarks embodying the results obtained by me, which are of so marked a character that I consider they are worth the consideration of your Institution.

The lubrication test in question was conducted in our joiners' shop, which consists of some forty-three machines, driven by a diagonal compound steam-engine, the line shafting being in the basement below the joiners' shop, some 298 feet in length, with twenty-eight bearings, and twenty-five countershafts of an average length of 5 feet, the belting being carried through the floor of the joiners' shop to these countershafts and to the various machines.

The I.H.P. of the engine working at about 90 lbs. pressure was about 80, and the machines comprise high speed circular saws, planing, mortising, and tenoning machines.

Our existing methods of lubrication had been to put grease pads on the line of shafting, fed by what we had considered to be a suitable oil for the purpose, and the first step made in the tests was to accurately determine the I.H.P. indicated on the engine when running—first, with the shafting running light, and secondly, with the shafting running the machines without any work in them. Instruments of the most accurate nature were adopted to ascertain this I.H.P., and not less than twenty sets of diagrams were taken in each case.

Indicators, four in number, were used, fitted with Sargeant electro-magnets, wired up in series, so that by closing a switch all indicator cards were taken simultaneously.

Accurate means were taken to work out these cards, and temperatures and humidities were taken with Lloyd's hygrodeik, and the speed of the engine was taken with a five-figure counter.

When running both shafting and machines together on the first test, a stop had to be made on account of a moulding machine suffering from a hot bearing when running at full speed, and, incidentally, I might mention, that it was found necessary to oil the machines continuously during the run in order to keep the bearings cool.

The results of the first test shewed that to drive engine, shafting and machines it required 84 I.H.P., and to drive the shafting and engine only it required 31·6 I.H.P.

The selection of a better lubricating oil was then carefully gone into, and after the first test was concluded, this new oil was used throughout all the line shafting and machinery; and a more efficient method of lubrication was also adopted, consisting of syphon oil boxes fed by a worsted thread to the bearings, and sufficient time was given for the new oil to wash out the remnants of the oil previously used, and a second test was made under exactly the same conditions as the first with the exception of the methods of lubrication and the lubricant used.

The second test shewed that to drive engine, shafting and machines it only took 65·3 I.H.P., as against 84 I.H.P. previously, shewing a reduction of 18·7 H.P. or 22·3 per cent.

To drive the engine and shafting only it required 25·4 H.P., shewing a reduction of 6·2 H.P. or 19·6 per cent.

A notable feature also was the temperature of the bearings, as during the first test the average of six bearings, when the old

oil and method of lubrication was used, was 47·1° Fahr. above the atmosphere, whereas with the new lubricant the temperature taken on the average of six bearings was only 15·2 above the atmosphere, showing a reduction of 68·1 per cent.

I am unfortunately unable at the moment to shew the gain which will be derived from the use of proper methods of lubrication and a suitable lubricant, as it would involve tedious calculations, and it would not be of interest to your Institution to prove the saving of coal which would necessarily follow, but this no doubt will be considerable, and I hope at some later date to be able to give some interesting figures derived from the whole of the plant in our shipyard, which, being electrically driven, should show a considerable saving on the average number of units used per day, taken over a period, compared with our present consumption.

Yours faithfully,

JOHN H. CLARKE.

MR. W. F. PARISH'S REPLY.

Mr. PARISH, in replying to the discussion on his paper, said—The first point brought up for discussion after I had read my paper was a question regarding the acidity and gumminess of tram oils, such as are used in mines for tramways, and a point in regard to the difficulty of moving cars when lubricated with some kinds of oils—the active power in this case being mules or horses. The oils generally used for greasing tubs or axles of small cars running in mines, are usually of very poor quality. It would be impossible to show any great efficiency on most work of that kind, on account of the mechanical conditions under which the oil must work. Sometimes, however, it is possible to overcome the defects or conditions and use a better lubricant. One remarkable case has just come to notice. In a certain mine in Scotland a train of eighteen cars was brought to a point by one horse. Then two trains of nine cars each and an extra horse was used. A change was made from the ordinary black oil to a good grade of lubricant, and a few days later one horse could easily work the eighteen cars. I understand that this mine has now four horses for sale, put out of work by better lubrication of the cars.

Mr. Morison's contribution to the discussion is exceedingly interesting, and deals with a phase of the question to which I would not undertake to add, for the reason that he is quite a specialist in investigating the particular after-effects of oils that have been used, especially with regard to emulsions which he finds in boiler feed-water. This he has already dealt with very well before your Institution.

In regard to Mr. Henzell's discussion, I did not have the pleasure of hearing him speak, but I have before me, and have read a copy of his remarks. He seems to be considerably worried because I have not given in my paper what he calls sufficient information to allow him to judge whether the facts, as I stated them, are from actual data, and whether the reductions and good work I mentioned have been performed. He also seems to take the rather remarkable stand throughout, of actually doubting the well-known fact of the difference in the lubricating properties of different oils. The only thing I can say is, that all the tests and all the reductions have been carried out by, and conducted under the supervision of expert engineers—men who make a study of comparative engineering, and the data are all taken under comparative conditions. It is not possible, owing to the space it would take, to give all the details in connection with each job, and it should not be necessary. Information of this nature is only valuable when the mechanical conditions are the same—which Mr. Henzell does not seem to understand. At the end of my paper I had given, however, a complete report of a large test, where every detail which Mr. Henzell could ask for is given. The only thing which is left out is the formulæ by which the oil, designated as being "good oil," is made. That I do not possess, and if I did I most certainly would not give it to him. There are a great many points he brings up that would seem to indicate that he did not enter into the discussion of my paper in a proper spirit, apparently over-looking entirely the effort I was making to impress upon your Institution in some way, the fact of the possibility of securing greater efficiency by the proper selection and use of the material which is common to you all. My paper is just a plea for better lubrication, that should help everybody in the oil trade, as well as in the consuming part of the engineering business. I take a broad stand on the subject, and you will find

I have treated it quite apart from any commercial aspect of the case, which Mr. Henzell, unfortunately, has not done, as he has referred a great many times to rather personal matters, which should not enter into the discussion of a paper of this kind. The details which he requires, on the one test particularly, over which he seems to be rather excited, where he mentions that no oil concern in England would sell an oil at 5s. 6d. which could possibly be a bad oil, I will take pleasure in giving as follows:—

The plant consisted of six Willans engines—

Three 2,500 H.P. triple expansion, 150 R.P.M.
One 500 H.P. compound expansion, 300 R.P.M.
Two 350 H.P. ,, ,, 350 R.P.M.
Steam pressure 180 lbs. per square inch.

One grade of oil was used for cylinder and crank chamber lubrication.

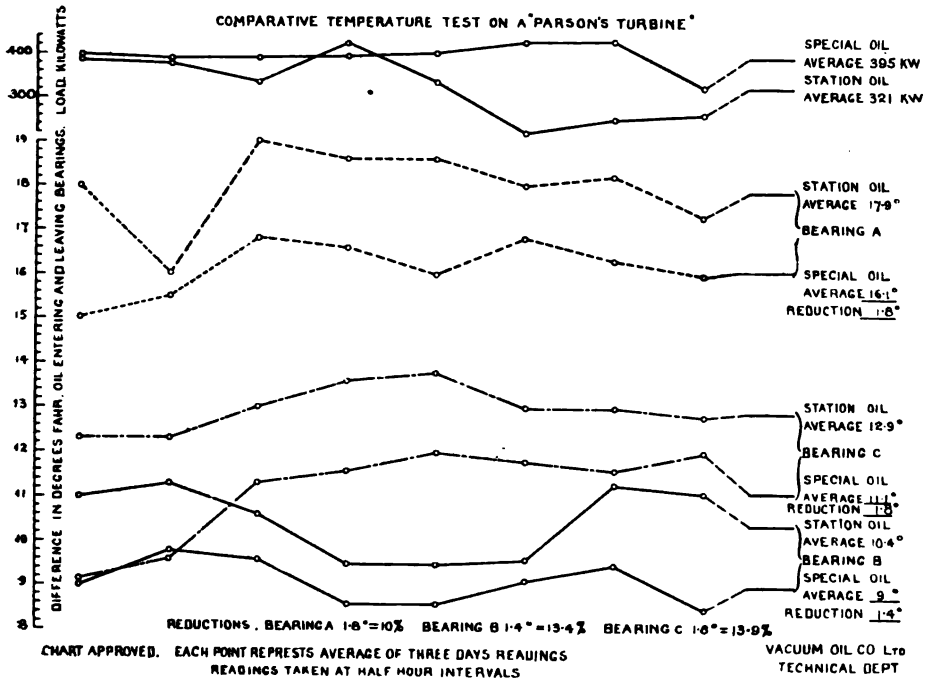

As to Mr. Clarke's questions in regard to whether it is possible to make a comparative lubricating test on a turbine, I have a record which has recently been completed of the only comparative lubricating efficiency test ever made on a turbine.

It was necessary to operate entirely on temperature readings, and to rig the job up so that six fixed thermometers would be put in the oil service for taking the temperature of the feed and discharged oil from each bearing, also taking the temperatures of the oil tank, water service, and the surrounding atmospheric conditions. Half-hourly readings were taken for three days, 8 hours a day, under the conditions as found, the station oil having run about 400 hours. A change was then made from this oil from the same maker which had not been used before, to ascertain what the difference in efficiency was between new and old oil of this make. The test resulted in a slight reduction of temperature in favour of the new oil. The system was then changed to a special oil which we thought would do better work, and the third test was taken. The results were most satisfactory, the averages with the special oil showing about 12 per cent. lower in the total frictional temperature of the bearings, as compared with the former new oil. The station then ran the special oil for some 400 hours to compare with the first test, and duplicated the readings of the second. From the temperature readings we found apparently the same reduction in the efficiency between the new and old special oil as with the first or station oil.

Mr. Clark also asks if a lubricating test on a turbine could be run right through to the fuel. I think it would be rather difficult, because the mechanical efficiency of a turbine is very high. The amount of frictional resistance to be worked with is a very small proportion of the total fuel consumption, or power required for moving the turbine, and it would be a very difficult matter to figure back; in fact there are no instruments I know of, such as indicators or measuring devices, which would enable us to tell in horsepower the difference in the efficiency we might get by lubricating the bearings of a turbine. We have been able to determine roughly that a reduction of 10 per cent. of the actual temperature of a bearing is approximately equal to a reduction of that amount of power consumed by the particular bearing under observation.

In regard to the mechanical efficiency of oil *versus* grease for the lubrication of the engines of steamships and mills, I have no power data in relation to steamships. I have, however, a great number of tests which have been conducted in different

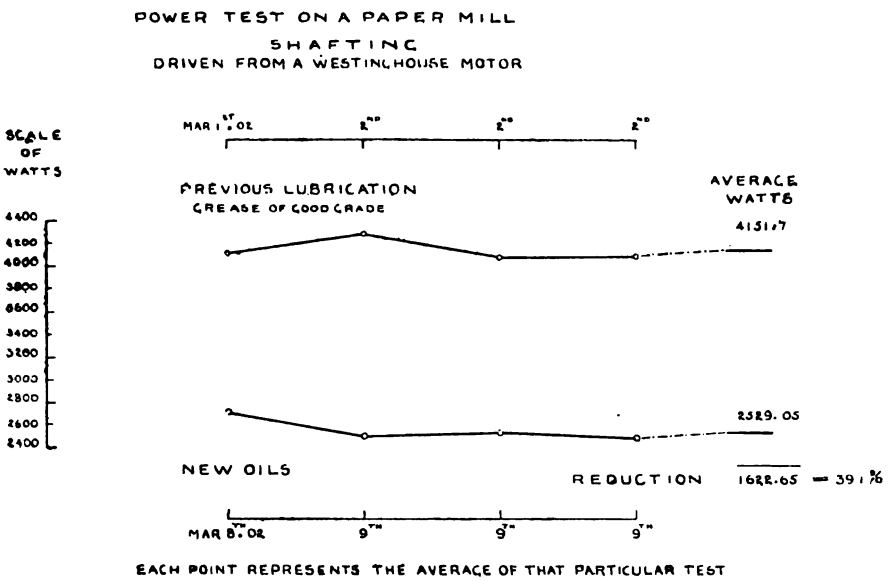

Grease Lubrication.

Test No.	Date.	Time.	R.P.M. motor.	Shaft.	Power (watts).
A	March 1st	5·30	1700	210·3	4147·9
B	,, 2nd	10·12	1700	220·3	4289·9
C	,, ,,	10·32	1700	220·0	4084·0
D	,, ,,	12·00	1700	217·3	4085·0
				216·9	4151·7

Oil Lubrication.

Test No.	Date.	Time.	R.P.M. motor.	Shaft.	Power (watts).
A	March 8th	4·00	1760	228·8	2691·6
B	,, 9th	11·00	1760	227·0	2467·0
C	,, ,,	11·30	1760	227·0	2503·3
D	,, ,,	12·00	1760	226·4	2454·3
				227·3	2529·05

Grease lubrication ... ... 4151·70 watts.
Oil ,, ... 2529·05 ,,

Reduction ... 1622·65 ,,
equal to 38·9 per cent.

Taking the proposition on the basis of lubricating with oil the grease would require an additional motor power of 64·16 per cent.

textile mills and manufacturing plants, where grease was used for lubricating the shafting, and where very elaborate power tests were made, using indicators and working from the engine, to secure an average frictional load, operating under grease lubrication, and then changing to oil. The largest reduction of which I have record is about 39 per cent. The smallest reduction is 15 per cent.; or, in the first case, if grease were put back on the shafting, it would require about 64 per cent. more motor power to simply drive the shafting. I am, fortunately, able to give a summary of a test made upon some line and counter shafting run from a motor, using grease for the first series of tests, and good oil for the second, and also show a chart which will give all the details in regard to the readings (see above).

With regard to the lubrication of gas engines, and especially the type known as gas-blowing engines, which Mr. Clarke refers to, there are in this country only two plants I know of with large gas-blowing engines, and it is the practice of the builders of this particular type of engine to lubricate the machine, the gas cylinders, and the air-blowing cylinders, with the same lubricant. This oil is fed through one system by one oil pump. The proposition is obviously wrong from a strict lubricating standpoint, as a gas cylinder should take, for good results, an oil quite different from what is required in an air cylinder, and it is also much better in a large engine to lubricate the engine, and especially the ring bearings, with an oil different from what would be put into the gas or the air ends. On the Continent, where gas engines of very large power are in constant use—in fact last week I saw a gas-blowing engine of 3,000 horsepower which was being lubricated with thirty-five kilos of two kinds of a certain oil in twenty-four hours: a very low consumption—one oil is used in the gas cylinders and sometimes as a general lubricant for the machine, but quite a different oil is used for the air end; and I also found, in looking over a great number of the largest gas engines in Germany, that no one made a practice, with the exception of one particular type of engine, of attempting to lubricate all these classes of work with the same oil, as is done in this country.

German gas engines are well fitted with mechanical force pumps. One engine of 1,600 horsepower had four single, six double, and two small gear pumps, or practically twenty pumps

in all for a two-cylinder engine. This is very good practice for gas engines, and the increased efficiency and saving in oil will more than pay for the extra equipment. This, however, would be very bad practice for steam engines where only one feed to each cylinder should be used, with one single feed pump for each cylinder.

I think we are losing quite a little of the efficiency of the gas-blowing engine in attempting to use one lubricant to cover such a wide range of work.

Mr. Little enquires regarding oils for automobiles. It is a fact that we have the greatest difficulty with this department of the oil-manufacturing business. The requirements are so varied, even with the same types of machines. Manufacturers are learning so much, and the industry of motor building is increasing so rapidly, that they do not hold to the same designs, or the same appliances, and we have to continually change our ideas and do new experimental work in order to meet the latest conditions. It is very difficult to put on record what is best for air-cooled or water-cooled motors, because in a year the new designs may require different treatment.

In regard to Mr. Weir's very valuable addition to the paper, I need only express my pleasure at learning the results of the tests which he made, and in knowing that his results have endorsed the data that I have obtained for working on this one subject of efficiency from oil.

Regarding Mr. Clarke's very valuable information, which, taken in connection with Mr. Weir's remarks and tests, should absolutely fix in the minds of the members of this Institution the great value to be obtained by simply dealing with the friction of your plant, there is no appliance that you could buy which would reduce the total load anywhere near to what it has been reduced in both of the plants mentioned by Mr. Weir and Mr. Clarke. If you should attempt to reduce your coal consumption by ordinary methods you would instal an expensive economizer, or condensing plant, or even change the boiler plant, or put in electric motors and a new generating station built after the very latest methods. You would then be fortunate if you really saved 10 per cent. of your coal, and you would have an expense sheet that would wipe out the saving for many years. But with your friction and with your oils, you have something that can be

handled in such a way that the results will follow quickly, and with no money spent for equipment, except in some cases, and then the amount will be small.

The yearly cost for good lubrication is very often less than the yearly cost for poor. As a straight engineering proposition a firm can very well afford to pay much more per year if the cost should happen to go that way. As I have mentioned before, it is considered good business to spend money for extra equipment to bring about a result very much less than that which can be accomplished by using "good oil."

I am very much obliged to the members of the Institution for the kindness with which they have treated my paper.

The CHAIRMAN said—I am sure we all accord a very hearty vote of thanks to Mr. Parish for the interesting and valuable paper which he has given to us.

This proposition was received with cordial acclammation.

COMMERCIAL DRY DOCKS.

By J. MITCHELL MONCRIEFF, M.Inst.C.E.

[Read in Newcastle-upon-Tyne on February 16th, 1906.]

The first question which naturally occurs to anyone proposing to construct a dry dock for commercial purposes and as a dividend earner is, "What ought the dimensions to be?" Modern docks must, of course, show some regard to future developments, but they must also avoid the outlay of capital which may lie unproductive for a more or less extended period of time.

If we take the conditions existing on the river Tyne as being fairly representative for the whole North-east Coast, we find that among all the ships cleared outwards from the river prior to 31st December, 1904, there was only one of which the net register tonnage amounted to 5,600 to 5,700 tons, or roughly speaking, a vessel probably from 12,000 to 13,000 tons deadweight capacity, and only three vessels in all prior to the date mentioned exceeded 4,900 tons net register. Are we to expect that vessels of still greater size will form any considerable proportion of our Mercantile Navy?

An analysis of the figures published by the River Tyne Commissioners of the number of vessels of various tonnages making use of the river during the five years 1900-1904 shows that while the vessels comprised between the limits of 500 and under 4,000 tons net register numbered 38,054, the number of those reaching or exceeding the latter dimension was only twelve, or only a small fraction of one per cent. of the number of those of between 500 tons and 4,000 tons.

Judging from these figures, it would appear that a dock of 550 feet length by 65 feet width of entrance by 14 feet depth on the sill at low water and 29 feet at high water of ordinary spring tides could probably deal with every commercial vessel ever cleared from the river Tyne up to the end of 1904.

Will the size of steamships increase to such an extent as to justify a commercial dock company in a large present outlay for docks of much greater dimensions than those just given? In my view the proper line to take is to provide for some increase over present-day ordinary dimensions, as regards width and depth, but to construct docks in such a manner that a further increase of length could be carried out at any time should there be some prospect of its being remunerative.

The foregoing remarks refer merely to concerns which have no special necessity for a dock of exceptional size. The case is quite different when a dock is projected by a large shipbuilding firm desiring to provide for the accommodation of the largest vessels which they expect to turn out of their yard in the future.

Site.

The next question for consideration is that of site. Probably in the majority of cases the word "selection" does not enter, owing to the fact of present possession of land or the impossibility of exercising any choice in the matter.

Where, however, it is possible, the selection of the site should be done in the most careful manner, and the mere fact of a certain piece of land being obtainable at a reasonable figure should not be allowed to be a ruling factor in coming to a decision. Instances are not wanting of docks, which, from lack of proper consideration and enquiry, have been saddled with heavy capital outlay which taxes their dividend-earning powers to the utmost. In every case numerous borings should be taken over the proposed site, and the small outlay required would be amply repaid by the greater certainty and accuracy with which the designs could be got out and by the greater confidence with which contractors would be able to fix their prices when tendering for the work. The omission to take a sufficiency of borings leaves an open door for claims for heavy extras.

The character of the subsoil of a site has very great influence on the design and cost of a dock. Generally a rock bottom is most to be desired, but this is not an invariable rule; hard boulder clay is excellent, while the softer clays, alluvial deposits, ground of mixed character, and water-bearing sand, give most trouble during construction. Instances of some of these will be described later. In choosing a site it should be kept in mind that

it is a great advantage for a dock company to have more than one dock, or at least to have a site which will allow of more than one dock being constructed upon it. It is also a great advantage for dry docks to be associated with a shipyard for reasons which are sufficiently obvious.

If possible there should also be provided a repairing berth with ample depth of water, and a wharf at which such repairs may be carried out or completed as do not necessitate the vessel being in dock. The site should have room for the various workshops, stores, and offices required.

Design.

It has just been remarked that the character of the subsoil has great influence upon the design and cost of a dock. To illustrate this I have prepared drawings of the general cross sections of four of the numerous docks constructed during the many years association between myself and my former partner, Mr. J. Watt Sandeman, whom I must thank for kindly joining with me in placing these sections before the Institution, he having been solely responsible for some of them.

The general cross section is almost the first feature of the design to be decided upon, but the actual cross section of the walls and, in some cases, of the floor also, will of course vary from point to point according to the variations met with in the ground. The thickness of the walls and floor are largely determined by experience, although it is also very necessary to make calculations of stability for the walls and of possible stresses in the floor resulting from earth and water pressure, and from loads on the blocks, but such calculations are, without scruple, overruled if they point to sections which do not satisfy the dictates of practical judgment. In fact the calculations are used as finger posts pointing out the direction of the road to be taken in the design, rather than as determinations of the distance to be travelled upon that road. There are always numerous practical contingencies to be taken into account. I do not propose to go into any calculations in this paper, as I think the four type cross sections appended will, when described, give a better general idea of the principles involved than an analysis of any specific case.

Section 1, Plate IX., is that of a dock built upon a very

favourable site. For the greater part of the length of this dock the lower half of its body was in rock, which, while not so hard as to give serious trouble in its excavation, was yet sufficiently strong to carry heavy local loads with safety. It was, however, of such character that it could not be left entirely uncovered, and the dock bottom was therefore overlaid with a thickness, or should I say thinness, of only six inches of cement concrete. The lower portion of the wall was practically nothing more than a strut to hold up the toe of the upper portion, which was proportioned to resist the combined overturning efforts of the earth and water pressures behind. In this dock there was no necessity to consider the effects of the exceptional local loading which sometimes occurs from the blocks under very heavy ships.

Section 2, Plate IX., is that of a dock also in good ground but not quite of the high character of No. 1. In order to distribute the load from heavily-loaded blocks over the surface of the subsoil, the floor was thickened in the centre, but over the rest of the floor the thickness was designed to be only 1 foot 6 inches. The section of the dock indicates that but little timbering was required to support the exposed faces of the excavation. In both of the foregoing cases the ground was such as to allow of very economical construction as regards the amount of concrete and excavation.

Section 3, Plate IX., shows a different state of affairs. The ground in which this dock was situated consisted of a clay which would stand vertical for a considerable height for some time after it was first cut into, but which was nevertheless of a somewhat uncertain nature. The dock bottom was founded partly upon this same clay and partly upon sand. The character of the subsoil shows its influence upon the design by causing a marked increase in the sections of both walls and invert, as compared with the two previous examples. In this instance also, the dock floor had to be designed not only with reference to the upward pressure which might come upon the underside of the invert, but also with some regard to the pressure from the blocks upon its upper surface.

Section 4, Plate IX., is that of a dock in what may be termed bad ground. The earth behind the walls consisted of layers of a treacherous clay, with other material inter-

spersed, which would rapidly break down when exposed to the weather, and the dock bottom or invert was founded upon a thin layer of the same clay, underneath which there was practically river mud or silt. This silt was so soft that, in another dock constructed on it, it was actually necessary on one occasion, when a pit was excavated for the concreting of a portion of the floor, to load the surface with men standing on planks to keep the silt down for a short time until the concrete could be got in. Here also the influence of the character of the subsoil is very apparent in the great thickness of the dock bottom in relation to the width between the walls. It would be possible of course to have conditions even worse than those met with in the construction of the dock indicated by Section 4, but such conditions would be almost fatal to any dock constructed under them being a commercial success.

In all these four docks the methods of carrying out the work were essentially different, but the description of these methods is not possible in a paper such as this. I may, however, remark that the mode of construction actually adopted in any of the first three types would have resulted in a disaster if they had been applied to the fourth.

In determining the cross section of a commercial dock the inner contour is designed almost wholly with regard to having a sufficient clear space around and under a vessel to allow paint to dry quickly, to provide room and light by which repairs can be carried out with ease and promptitude, and to give altars for the support of shores. It is now customary to provide only a few altars in the upper half of the wall face, of such width and height that workmen can pass with ease and safety from one to the other or along any one of them. At the foot of the wall one or two low altars are sometimes also provided, but their function is not solely that of an altar properly so called, but also that of a toe to the dock wall.

The large number of altars provided in most of the older docks, and the consequent great width between the copes, are not necessary or desirable at the present time. The great width at the copes would cause much unnecessary pumping, and the great distance of the copes from the centre line of the dock, and consequently from vessels in the dock, would require cranes of very large radius, and this of course would entail extra weight

and size of cranes to give sufficient stability. In addition to these inconveniences, an excessively wide dock takes up valuable space which might be otherwise occupied.

Steps or reductions in thickness should rarely, if ever, be made at the back of dock walls, as it is almost impossible to prevent some little movement of the backing if the wall back be not built hard up against the earth face so as to avoid having to remove timbering to put in filling.

Rudder wells are usually provided immediately inside of the sill platform and sometimes also at the inner end, but the latter is probably an unnecessary expense, as it is unusual for a vessel to be taken stern first into a dock. The formation of the rudder well should be carried out before the dock bottom immediately around it, when in soft or treacherous ground, as there is considerable risk of a cavity being left under the dock floor by the drawing away of the earth from under it when this precaution is not attended to. At one time it used to be the rule to provide a number of inclines or timber slides on each side of the dock, but these are now rarely seen.

The surface of the dock floor should be at about 3 feet 6 inches to 4 feet 6 inches (preferably the latter) below the level of the sill, in order to allow the blocks to be of sufficient height for easy inspection and convenience in carrying out work on ships' bottoms. The floor should slope from the centre towards the sides so as to drain the water away from the feet of workmen. It is also usual to give the dock floor a slope from the inner end of the dock towards the drainage culvert leading to the pumps; this, however, entails a loss of depth either on the blocks or in the height of the blocks at the upper end of the dock, and I think it is preferable, when dealing with good ground, to keep the floor longitudinally level and to put the whole of the necessary drainage slope in the side gutters leading to the drainage culvert. In docks constructed in bad ground, where every foot of depth which can be avoided in excavation is of the utmost importance, it is not always possible, or rather expedient, to put the side drains right at the extreme sides of the floor, and an instance of this may be seen in cross section No. 4, in which the drains or gutters are midway between the blocks and bottom altars.

As regards depth of water upon the sill, the value of a dock,

at least on the North-east coast, is nowadays really gauged by the depth on the sill at low water ordinary spring tides. Formerly it was measured by the depth at high water ordinary spring tides.

In the construction of the hollow quoins and sill it has been found satisfactory to make the bearing surfaces of greenheart in place of the more usual practice of building them up of granite blocks. This construction is not only less expensive but also renders it much easier to make a watertight joint between the gates or caisson and the greenheart sill and quoins than with granite. If greenheart be good enough for the heel and mitre posts and for the clapping sill of the dock gates, it is surely a proper material for the quoins and sill. It has the further advantage of greatly reducing the friction between the heel post and the hollow quoin and of thus avoiding a great deal of unnecessary wear on these very important parts. This feature will be referred to again when dealing with dock gates.

Plate X. shows sections of greenheart hollow quoins and sill, which will make clear the method of construction referred to. It will be noticed that the greenheart sill projects slightly in front of the concrete of the sill platform, with the object of permitting the timber to be dressed without damage to workmen's tools. The dressing of the sills and quoins and the fitting of the gates to them in the case of a wide and deep dock entrance, so as to make an almost perfect watertight joint, is a very fine piece of work, and demands for its successful execution the exercise of the greatest care and experience from the very beginning, and it should not even be commenced without having carefully considered every step. A small mistake in the work may have serious consequences and cause great delay, annoyance and expense.

Gates or Caissons.

The gates may be of wood, iron, or steel, or of a combination of these materials. For the smaller class of docks, say with entrances of not more than 45 feet wide by 25 feet total depth from cope to sill, pitchpine timber gates are quite satisfactory, and are also very durable except in situations where the ravages of marine worms are to be feared. For the larger commercial docks timber gates are too heavy and cumbrous. Composite

gates having iron or steel ribs with timber planking are also sometimes adopted and are very economical in first cost. For the larger and more modern docks, however, the gates will usually require to be of steel or iron throughout, in order to provide the strength required to sustain the great depth of water over the sill at high tides, and at the same time to be comparatively light and easily worked. It has sometimes been urged that the timber gate, by reason of its greater mass and solidity, is superior to the steel or iron gate in the event of being struck by a vessel; but this advantage is more imaginary than real, and there is no reason why gates for commercial dry docks should be specially made to resist collision any more than the vessels which the dock is constructed to contain. If this principle of making structures capable of resisting any and every possible contingency were to be carried out consistently, it would result in an enormous and unnecessary waste of money.

In order to save verbal description, I have appended three type drawings of gates carried out from my own designs. Plate XI. shows one leaf of a pair of timber gates for an entrance of 45 feet wide by 21 feet 9 inches depth from cope to sill. These gates were of pitchpine with greenheart heel posts, mitre posts, and clapping sill.

Plate XII. shows a composite gate in which the ribs were of steel and the skin of the gate was of pitchpine timber, the heel and mitre posts and clapping sills being of greenheart. These gates span an entrance of 46 feet 9 inches wide by 22 feet 3 inches total depth from cope to sill.

Plate XIII. shows one leaf of a pair of steel gates for an entrance of 61 feet clear width by 27 feet 3 inches depth from cope to sill. The heel and mitre posts and clapping sills in these gates were of greenheart. The drawings are to a large extent self-explanatory, and I hardly need to add to the information given in them. I may, however, point out that the steel gates were provided with a buoyancy compartment, by means of which almost the entire weight is waterborne. This buoyancy compartment is at the lower part of the gate, and the upper part is quite open to the water on the outer face, with the result that the lifting effort of the buoyancy compartment is practically constant, and does not increase beyond a very limited amount with the rise of the tide.

The design and construction of dock gates are much influenced by the practical difficulties to be met with in the satisfactory hanging and fitting of the gates to the dock. Only those who have had actual practical experience can appreciate the full force of this remark, and it is rare that contractors entrusted with the construction, erection and fitting, reap any substantial benefit from a first essay in this class of work.

In designing dock gates it should be remembered that the fitting of straight sills is very much easier and less costly than is the case with curved sills, and indeed the latter should not be adopted if they can be avoided. The curved gate may be a little lighter and so save some cost in material, but any such saving in the construction will be greatly discounted by the extra cost of fitting to the curved dock sills.

I have already made some reference to the small amount of friction between hollow quoins and heel posts of greenheart, and to illustrate this I may say that, when hanging dry before the removal of the coffer-dam, the large steel gate shown in Plate XIII., weighing (for one leaf) about 41¼ tons, could be moved very easily; and in fact I moved it myself by putting my back against the mitre-post end of the gate and my feet against the sill and exerting a steady effort. As the friction under these conditions is very much greater than when the weight of the gate is largely waterborne, it can be understood that a very small amount of frictional resistance actually occurs when under working conditions. Rollers are frequently put on dock gates to take the weight, but they are, generally speaking, nothing but a source of trouble, expense, and unnecessary wear and tear. The resistance of the gate to being moved is very largely increased, and under ordinary conditions I do not know of any function which can be accredited to rollers which would not be infinitely better performed by the buoyancy compartment alone.

In the design of steel or iron gates useless expense is frequently caused by the unpractical nature of details involving extra templating, smithwork, cranking, joggling and packing.

It is the common practice to space the ribs in such a manner that each rib shall have the same amount of load to carry, and with this as the basis of design the skin plates are made to reduce in thickness from the bottom towards the top. The

result is that a great deal of packing has to be done to work in the different thicknesses. In my own practice I have initiated a different basis, by making all the skin plates of the same thickness from top to bottom, and all flush with each other. The ribs are spaced so that the bending moment from water pressure upon each plate, considered as a beam spanning the opening between two ribs, shall be the same for every plate. In determining the thickness of the plates I assume that the plate is flat and that it is merely supported at its edges, and no account is taken of the fixity of its edges by being riveted to the ribs, nor is any definite allowance made for its resistance in "suspension." These additions to the strength are counted on as a part provision for corrosion. After determining the thickness of the skin plates, the webs, rib angles, and cover plates outside of the skin plates are dimensioned so as to give a sufficient section combined with the skin plates to resist the principal stresses on the gate.

Gates designed on this basis, of course with proper attention to practical details, are both simpler in construction and therefore less costly and are also much more easy to make watertight and to maintain, and they are at the same time quite as economical of material. There are also both theoretical and practical reasons, which I need not enter into here, which may be adduced to justify this basis principle of design as being more rational, even as regards the principal stresses, than the more usual practice. It will be noticed that the steel gate shown in Plate XIII. has the upper part open towards the water pressure, and that at that part the inner side alone is provided with a skin, the double skin only occurring for the height of the buoyancy compartment. Objections have sometimes been raised to this construction on the ground that mud will lodge upon the exposed upper ribs. If a skin were provided on the outer face at the top as well as at the bottom, but with holes provided to allow the water to have ingress and egress, there would probably be no objection raised, although this skin would merely hide the mud which would be inevitably deposited inside and which would be very troublesome to get out. With the open construction, on the contrary, any mud deposited is at once apparent and is very easy to remove.

There are one or two points of practical interest in the design of the anchors and the heel sockets of dock gates to which I may refer.

The ancient practice with heel sockets was to put the pivot proper on the heel of the gate and set the socket in the masonry of the gate platform. The reverse of this is now the case (Plate XIV.), and with the very obvious advantage that mud and sand cannot lie in the socket and grind the bearing surfaces away. It is even now sometimes the practice to make the pivot and the socket a good fit, or at least to leave very little play between them. When this is combined with a roller upon the other end of the gate which may have to roll over obstacles accidently dropped upon the roller paths, the stress upon the heel pivot and the socket cannot be at all good for the structure. The heel pivot of a dock, at least judged from my own experience, should have a certain amount of freedom and there is no necessity to bind it so hard and fast.

The anchorages of gates show great diversity in design and too frequently exhibit an utter indifference to the difficulties to be met in hanging, fitting and dressing the gates. Plates XV., XVI. and XVII. show three different designs of anchorage. Plate XV. is an anchorage which I designed a number of years ago. Its defects are that it is adjustable in one direction only and that it takes hold of the masonry of the entrance walls at the very top and thus depends too much upon the bond existing between the upper and lower parts of the masonry or concrete. Plate XVI. was designed some years after the other and was a considerable improvement upon Plate XV. in that anchor bars were carried well back and into the concrete side walls, and the anchor ring and its connections to the anchor bars allowed of adjustment being carried out in a more satisfactory manner. Plate XVII. shows my last design for this detail, which has shown in actual work very marked advantages over the earlier designs. It will be seen that the connection between the anchorage bars and the anchorage ring, which takes hold of the head of the heel-post, is such as to afford considerable freedom in the setting of the anchor bars and subsequent centering of the gate and its final adjustment; and in the event of the gate having to be taken out of the hollow quoin, either while being dressed and fitted or afterwards for the purpose of repairs, the anchorage bars could

be readily disconnected. The bearing faces of the nuts upon the extreme ends of the anchorage bars being spherical surfaces, and the provision of pin joints in the anchorage bars themselves at a short distance away from the hollow quoins, practically make the anchorage self-centering, and at the same time these provisions avoid the possibility of heavy local stresses in the event of having to draw the anchor ring back slightly inside of the position originally contemplated.

The sluices for filling the dock are sometimes made in the gates, but this is not a desirable practice. I have, however, had to place the sluices there under special circumstances.

As regards the opening machinery for the gates of a commercial dock, I regard it as a waste of money to put down expensive hydraulic machinery. The gates of any modern-sized dock can be opened by hand gearing in three or four minutes, and if a little quicker speed should be deemed desirable, it can be obtained by providing a small barrel at the end of the first-motion-spindle of the gate winch, and passing a few turns of a wire rope round it and thence to an adjacent steam winch or electric capstan. To put down either hydraulic or electric power for the sole purpose of opening and closing gates, which will only be put into action for a few minutes of each day at the very most and which may lie idle for a month or more in cases of vessels being docked for heavy repairs, is simply to lay out capital to eat its head off. In any case the opening machinery should be capable of beng worked by hand, even if special motive power is supplied as well.

A matter which has very frequently been discussed is the question of the relative advantages and economy of caissons as compared with gates. There cannot be a doubt as to which is the less costly, even if the caisson be merely swung out into the river without any special provision in the nature of a caisson-chamber. If the latter be also provided it will, in the case of the large docks now required, add a very large sum to the first cost. It is to be remembered also that the chamber for the caisson must necessarily be placed at the very point where it is most desirable to avoid any unnecessary constructive work, that is, just at the very entrance of the dock, and it will entail a much larger coffer-dam than would otherwise be required and will increase the risks which are inseparable from the construction of the river-end of any dock.

It is more than 150 years since Belidor strongly urged that the entrance of a dock should be the first part to be constructed. This is now more than ever necessary, in view of the far greater depths to which both permanent and temporary works have to be carried, and there is, at the present day, every reason to endorse Belidor's opinion, in order to avoid working for any lengthy period behind a temporary coffer-dam. It is, therefore, for a commercial venture, a mistake to increase the constructive work to be done at the river-end of a dock, unless some very substantial advantages are to be afterwards gained. I do not think that in general there are advantages in the provision of a caisson-chamber to justify the extra expense and risk, and having regard to all the circumstances I think that the balance of advantages is very greatly in favour of gates as compared with caissons, at least for commercial enterprises.

It is sometimes claimed that a longer dock can be obtained with a caisson than with gates, but I have had to consider this question more than once and have not found this to be correct. Gates are undoubtedly much less costly, they are handier and quicker in working, they are not liable to get adrift, and they do not require special pumping engines and boilers, and special men to attend to them.

Filling Sluices and Culverts.

These should be of ample size to allow the dock to be filled rapidly, but at the same time care must be taken not to have such a violent rush of water into the dock as to endanger the blocks under the vessel in the neighbourhood of the culvert mouth. The filling culvert has generally been formed in the concrete or masonry of the entrance walls, and the top, bottom, and sides are sometimes faced with specially strong material, brick, stone, or rich concrete, to resist the abrasive action of the water.

A much better type of construction, however, is to form the culvert of large cast-iron pipes embedded in the walls, with ordinary water-main valves to act as sluices. By this construction the water is not allowed access to the interior of the walls, a result which is much to be desired where the dock entrance is exposed to salt-water, and the expense and trouble of forming timber moulds and centering and special facing material are

avoided. The cast-iron pipes partly balance this saving, but the use of standard circular valves is much more satisfactory than the provision of a specially designed and constructed sluice gate.

Pumps.

I do not propose to deal with the details of the pumps and pumping machinery required for dry docks, but I may remark that the great developments in the distribution of electric energy which have taken place during late years promise to effect an economy in the construction of, and to furnish a great convenience in regard to the pumping plant of dry docks.

In the past it has been usual to provide engine and boiler rooms at no inconsiderable expense to contain the machinery requisite for the pumping operations at dry docks. In the future, at least upon the banks of the Tyne, there will be no necessity to provide boiler rooms at all, the size of the pump rooms will not need to be of such large dimensions, and the number of attendants required to work the pumping plant will at the same time be reduced, the pumps being driven by electric motors ready for use on the shortest notice.

Miscellaneous Details.

It would be out of place in this paper to attempt to consider the numerous minor details which go to make up the equipment of a dry dock, such as blocks, cranes, capstans, bollards, etc., on all of which, however, useful information may perhaps be contributed in the discussion.

Materials of Construction.

In modern docks the chief material of construction is Portland cement concrete. The results obtained from the use of this material have been such that I have thought it well to devote some special remarks to the matter.

During the last twenty years, and in various parts of the country, a number of facts have gradually been brought to light regarding concrete structures exposed to salt-water which were previously quite unknown, and which are of the greatest importance. The cheapness of concrete as compared with masonry, its execution by unskilled labour, the facilities which it gives for carrying on work in a loose manner (by avoiding the systematic and regular courses in which it is necessary to execute ordinary

masonry whether of stone or brick), and the presumed monolithic result obtained by the mere deposition of one batch of concrete upon another, were among the virtues ascribed to concrete, and which formed great attractions for its extensive use in large masses for marine works. Some of these supposed virtues have now been shewn to be vices, at least so far as concerns the construction of dry docks and also, but to a less extent, other marine works.

The cheapness of concrete as used in many cases partly arose from the mistaken adoption of proportions which had been used quite successfully for works where the influence of sea-water did not come into play, and, therefore, where no evil effect resulted. These proportions while (in their original condition) affording ample strength have now been proved quite unsuitable for structures exposed to salt-water. In no marine structures has the action of sea-water upon Portland cement been more clearly made evident than in the case of dry docks. The results of this action are the gradual swelling of the mortar and consequent disintegration of the concrete. This swelling and destruction is more or less rapidly developed as the mortar is more or less permeable or pervious, and it is now abundantly proved that unless the concrete be of a character which will absolutely prevent percolation of the salt-water, through it or into it, that it is only a question of time for the concrete to be gradually but surely deformed and disintegrated. These remarks will explain the desirability of having the filling sluices formed of cast-iron pipes, upon which I have already remarked.

If the concrete be made as it is now known that it should be made, and the cement obtained from a first-class and experienced maker, there should be no more reason for expectation of failure than there is for feelings of alarm as to the safety of steam boilers generally because an occasional steel plate gives way in an unaccountable manner.

The facility which concrete affords for the irregular carrying on of work is a very undesirable feature, and on no account should work be allowed to be done in the haphazard manner which it has been usual to permit in the past. In fact all concrete work in dry-dock construction should be carried out on most regular horizontal and vertical lines. All beds should be made quite flat and level, and before a fresh batch of concrete is

DISCUSSION.

The CHAIRMAN said—I am sure we are all much indebted to Mr. Moncrieff for his paper, which is now open for discussion.

Mr. M. C. JAMES said—I have followed the reading of this instructive paper with much interest. I entirely agree with Mr. Moncrieff that the fixing of the dimensions is a very serious problem, and needs most careful consideration. It is very surprising to note, from the official figures quoted in the paper, how few very large steamers frequent the River Tyne. The facts so disclosed are not very encouraging to those who have embarked their capital in docks of exceptionally large dimensions. It is not sufficient, of course, to build very large ships and dock them, perhaps, once for painting before they leave the river, what we want is that these ships should come back again and again for dry-docking and repairs. Geographically our River Tyne is not favourably situated for very large ships; they naturally gravitate to the Bristol Channel and west coast ports. That is largely because there are few, if any, suitable freights to be had here, at any rate at present, for cargo vessels having dead weights of anything above 5,000 tons. Another thing that operates against them is the action of our river authorities in not encouraging such large ships to use the river for bunkering or dry-docking purposes. The dues levied by the Tyne Commissioners are practically prohibitive as compared with other ports, some of which admit ships for these purposes absolutely free. It is to be noted, from the recently issued annual report of the Tyne Improvement Commission, that although a larger number of ships used the river in 1905, as compared with 1904, the average tonnage per ship was less in 1905 than in 1904. In view of the increasing size of modern ships one would expect to find the exact opposite. So long as some of the Commissioners seem to play the part of giant ogres defiantly protecting the water way, instead of acting as guardian angels to encourage the commerce of the port, we must expect results like these. It is indeed surprising to find that the average tonnage should be less, and we may ask, what is the use of a magnificent waterway unless we have magnificent ships using it and magnificent trade in connection with it?

and the more zealous advocates of both types will doubtless ultimately recognize that each has its proper sphere.

There have been two claims made for floating docks, which it will perhaps be worth while to notice:—

(1) It is frequently stated that the floating dock is less costly to construct than the dry dock.

In general this statement is entirely contrary to fact. Under normal circumstances, if the site is of such character as will allow a dry dock to be made without excessive expenditure for bad foundations and without wasting money upon unnecessary luxuries, then I am sure that, capacity being compared with capacity, the dry dock will prove the less costly of the two.

The amount of excavation required for the floating dock, when placed within the river-frontage line of a river such as any of our North-east coast rivers, is very much greater than is required for a dry dock, and to the extra excavation must also be added the cost of providing timber quays along at least one side of the floating dock, which would not be required for the dry dock. It also requires to be taken into account that to construct timber quays to carry heavy loads, such as travelling cranes of the dimensions now deemed desirable in connection with docks, would cause this single item of cost to be the reverse of insignificant. On the other hand, the earth behind walls of a substantial dry dock will carry such cranes without any extra cost whatever. Further, the construction of timber quays alongside the floating dock demands that the workshops and sheds of the dockyard shall either be at a considerable distance from the dock or shall be of a relatively light type.

(2) The second claim is that the floating dock can be sent down a river or out into a harbour to meet and take on damaged vessels.

I hardly think that such a claim as this can be taken seriously, and I am sure that the merits of floating docks for such situations as they are fitted are quite sufficiently obvious without the necessity of putting forward such a weak plea as that just stated.

The whole question of whether a dry dock or a floating dock should be adopted is almost invariably subject to the special circumstances of each individual case.

I will conclude by expressing the hope that a useful discussion may take place upon the subject of the paper.

As to the gates, I share the writer's view that they should not be made abnormally strong to resist the remote possibility of damage by collision, but rather they should be lightened as much as possible, so as to ease the strain on the heel posts, and so facilitate easy working. Roller paths, I agree, should be avoided. Our experience is that the rollers wear, and when they get much worn they cannot be got at, besides which obstructions frequently lodge in the path and thus hinder the free working of the gates. The heel pin should certainly, I think, be fitted to the gate itself, as pointed out by Mr. Moncrieff, but the socket in which it works needs very special attention in its design. I know of one case of a disastrous collapse due entirely to the bursting out of the metal in the heel socket, with the result that the whole gate collapsed. Then as to anchorages, of the plans shown I would prefer the sextant-shaped arrangement. This was, I believe, first used many years ago in the gates of the Victoria Docks, London, but the plate should, to my idea, be anchored back into the concrete by cables or tie rods, attached, of course, to the sextant plate, and with plates on their inner ends. As to sluices, I do not agree with the writer that sluices in the gates are not desirable. On the other hand, we have found them much to be preferred to honeycombing and weakening the dock heads with filling culverts, besides which the side rush of the water through the culvert tends to upset the blocks at the after end of the ship.

Electrically-driven pumps have been used very successfully in many docks on the North-East Coast, but at the present juncture it seems an open question whether gas engines are not a more economical method of driving the pumps, especially suction gas engines.

With regard to the deterioration of concrete, it is to be feared that much of the deterioration which so many docks on the North-East Coast have suffered from, to the detriment of the unfortunate investors in such undertakings, has not been due to salt-water action, but rather to the use of inferior and badly-mixed and carelessly laid concrete, and, in some cases, to the proportions not being suitable for sufficient strength. A comparison of various docks in this district clearly bears this out. Many, indeed most of them, cannot be said to be any credit to the contractors who built them, but, fortunately, there

are one or two very notable exceptions which rather upset the deterioration theory. As to the question of floating docks *versus* dry docks, it is a big question and would require a separate paper to adequately deal with it. I think with Mr. Moncrieff that many of the claims put forward for floating docks will not bear criticism, and the wild statements referring to comparative cost cannot be maintained. On the whole, it seems to me that for carrying out extensive repairs on a badly damaged ship a graving dock is to be preferred to a pontoon dock. When we have a ship very much out of shape it tends to straighten itself in a dry dock, but in a pontoon dock there is a great danger of the dock accommodating itself to the mis-shapen ship, instead of the ship to the dock, and that has actually happened in this district. The Institution certainly owes a deep debt of gratitude to Mr. Moncrieff for having put this important subject before the members in such a clear and instructive manner, and I hope his paper will lead to a useful and interesting discussion.

Mr. J. Watt Sandeman said—With your permission, I propose to say a few words on the subject of dry docks. The paper we have just heard cannot fail to interest engineers and shipbuilders, seeing that (including pontoons) there are no fewer than 27 docks on the Tyne, and most of them very profitable undertakings. As the cost of docks depends very greatly on the character of the ground in which they are constructed, the importance of obtaining a knowledge of the ground beforehand from borings is obvious, and I have seen many instances where great saving could have been effected and accidents averted had borings been made beforehand.

In regard to the design of a dock, when constructed in water-bearing strata, it must be considered somewhat in the light of a tank partially submerged, and the walls and floor proportioned to resist both water and earth pressure. The water pressure being frequently reversed by the dock being emptied and filled severely tests the walls, but the greatest stress occurs when the dock is empty and a heavy ship on the blocks. In this case the floor is in the condition of an arch with the haunches heavily loaded, and having a reverse pressure over a certain breadth at the centre, tending to deform it, and where the strength of the invert is not great, or the

ground of unequal character, rupture might easily take place. In regard to the tendency to float, it would be quite possible for docks, in water-bearing strata, to be lifted, but as a rule the weight of walls and floor necessary for retaining soft ground, combined with the frictional resistance of the earth against the walls, is sufficient to give a margin of safety against flotation. Accidents often happen from inexperience in the mode of dealing with excavation. In soft ground, the walls should be brought up in closely-timbered trenches, and the mound of earth between should not be taken out until the walls are completed, and then only in short sections and the floor got in immediately. In more than one case I have had to construct the floor in the form of an inverted arch, excavating the soft ground in short pits with sides radial to the arch, so as to make the floor in a series of radial blocks. In one particular instance, to which Mr. Moncrieff refers, the ground was so soft that it rose up in the bottom of the pit, and I had to put men in to stand on it till I got the concrete in. Floors constructed as an inverted arch make a perfectly safe dock in soft strata.

In regard to gates, probably most of you who are mechanical engineers will agree that it is a mistake to provide rollers. I have constructed fourteen pairs of gates without rollers, all of which worked satisfactorily. In event of damage occurring to a roller, a gate and its anchorage may be severely strained. An instance of this occurred where I had to remove an obstruction blocking a gate, and when the diver went down he found the roller had been wrenched off. It is manifest that the completion of a dock entrance first is of the greatest importance, and it should be made imperative in all specifications, because as soon as the gates are fixed, a great risk to the dock is removed, in view of an accident happening to the coffer dam. I agree with Mr. Moncrieff as to gates being more easily worked and being less cumbersome and costly than caissons. With regard to sluices, they are awkward to construct in gates, and reduce the flotation. I consider that it would be an advantage to provide two small sluices, one in each side wall, instead of a large sluice in one wall. This would reduce the rush of water against the blocks, and when required one sluice could be laid off for repair. For convenience in working, I think that most dock

managers prefer to have the floor with a slight inclination from the upper end of the dock to the gates. Probably ninety-nine ships out of a hundred when docked were light, and draw more by the stern, and if the blocks were level, the stern would catch them first, and have a tendency to knock them over. This has actually happened in some cases. Another advantage in keeping the dock a little higher at the upper end is, that it reduces the depth of gutters at the sides, which are a source of weakness in docks which require a strong floor.

With regard to concrete, there were some unfortunate experiences, a good while ago, when engineers did not know the injurious action of sea water upon it, but this injurious action has been clearly proved by the investigation of chemists, both at home and abroad. It does not, however, happen in concrete which is watertight. In porous concrete it does happen, and entirely owing to its porosity. Concrete, which might be absolutely good for ordinary purposes would be disintegrated in sea water and would then appear to have been originally defective. Recently an engineering friend told me that he had a similar experience with a pier in the South. He sent a diver down to examine it, and he was able to walk under the pier. I have found the same action to be going on at different places where I have been called in to advise. Having made a study of the subject, I have found conclusive proof, after constructing many works, that concrete made with good cement and thoroughly watertight is absolutely safe in sea water. As to facing concrete walls with bricks or coping them with granite I do not think that such would be worth the extra cost, because any material will be destroyed by ships, especially those having overlapping plates. Damage is mostly caused when ships are being docked by either the bow or sides catching the edges of the altars, and the remedy is to provide fenders at such parts. I have tested concrete for hardness as compared with sandstone and granite and found it equal to hard sandstone, and even to some granites —that is when the concrete is made with gravel or broken whinstone. Referring to floating docks, I have made comparative estimates of the costs and in ordinary ground at riversides the cost of a graving dock of the same capacity as a floating dock would be 40 per cent. less. In hard ground the difference in cost would be much more in favour of dry docks.

Mr. J. R. Baterden (by permission of the meeting) said—It struck me when reading this paper that it was not so much the small details in connection with dock construction which would interest you most but two or three points which affect you as dockowners and shipbuilders. One of the most important of these is the width of entrance. It is a question when building a dock whether it is worth your while, for the sake of docking two or three very large ships in the year, to make a graving dock with a very wide entrance, or rather to make it of moderate dimension and deal with the bulk of the commercial marine. About twelve years ago Mr. W. R. Galbraith, Vice-President of the Institution of Civil Engineers, asked Messrs. Thomson's of Clydebank, what their idea was as to the size of ships, and graving docks to suit them, say thirty years hence, and their view then was that graving docks should be capable of dealing with vessels 800 feet long and 80 feet beam. Their prognostications are nearly fulfilled already, because Harland & Wolff are building a vessel 715 feet in length with 75 feet beam. My own idea is that something like 65 or 70 feet is a good width for a graving dock entrance, and this width would enable you to deal with the whole of the commercial marine with few exceptions. The extra cost of constructing a dock with 65 or 70 feet entrance and one 10 or 15 feet wider would be at least 10 per cent. It may interest some of you to know that of the total cost of a graving dock, say 500 feet long with a 70 feet entrance, one-third is spent up to a point about 50 feet inside the heel post of the gates, this large amount of money shows the costliness of work at a dock entrance and helps to prove Mr. Moncrieff's suggestion that as little extra work as possible should be done near the river front, and is one of the arguments against recesses for caissons. Another point for you to consider is as to the advantages, if any, of caissons as compared with gates. The only advantage which I see they have over gates is that in the case of a caisson you can get a roadway, or railway across the mouth of the dock which you cannot get with gates. Caissons are certainly not cheaper than gates. Gates can be opened as soon as the water is level on both sides, and that is certainly not the case with most caissons, and they must be very awkward in a tideway when the dock is open, whilst a caisson recess with the machinery in connection with it, would cost quite as

much, if not more, than the caisson itself. As to floating docks *versus* graving docks, I do not know any place in which a graving dock could at reasonable expense be constructed where I would recommend a pontoon. There are many places where you could put a pontoon where it would not be economy to build a graving dock, but in any situation suitable for a graving dock the cost of a pontoon would be considerably more. Mr. Lionel E. Clarke read an interesting paper last year before the Institution of Civil Engineers, and in the discussion upon that paper I made particular reference to the pontoons at Smith's Dock Company's North Shields yard. There it would have been impossible to have built one graving dock of the size of the largest of the pontoons without so cutting up the yard as to practically spoil it. Both graving docks and pontoons have to be considered on their merits. Smith's yard and other places of a similar kind—narrow strips of land along a riverside—are specially suitable for pontoons, but the excavation for a pontoon is much greater than for a graving dock. Some say that the excavation can be done cheaper. If it is done by dredging, that is so, but it depends upon the quality of the material, and it certainly takes a long time. As Mr. Moncrieff said, the question of taking the pontoon out to a harbour mouth to wait upon and take on damaged vessels cannot be seriously considered.

The discussion was adjourned and the meeting dissolved.

NORTH-EAST COAST INSTITUTION OF ENGINEERS AND SHIPBUILDERS.

TWENTY-SECOND SESSION, 1905-1906.

PROCEEDINGS.

THE FIFTH GENERAL MEETING OF THE SESSION WAS HELD IN THE LECTURE HALL OF THE LITERARY AND PHILOSOPHICAL SOCIETY, WESTGATE ROAD, NEWCASTLE-UPON-TYNE, ON FRIDAY EVENING, MARCH 16TH, 1906.

R. SAXTON WHITE, ESQ., MEMBER OF COUNCIL, IN THE CHAIR.

The SECRETARY conveyed to the meeting from the President (Lord Armstrong) an expression of his lordship's regret at not being able to be present owing to being detained on business in London.

The SECRETARY read the minutes of the previous General Meeting, held in Newcastle-upon-Tyne on Friday, February 16th, which were confirmed by the members present, and signed by the Chairman.

The CHAIRMAN appointed Mr. David Andrew and Mr. Alfred Harrison to examine the voting papers for new members, and the following gentlemen were declared elected:—

MEMBERS.

Chapman, John Abel, Engineer, c/o Messrs. Clark, Chapman & Co., Victoria Works, Gateshead.

Davies, Thomas Henry, Ship Draughtsman, 4, Princess Gardens, Waterloo, Blyth.

De Keyser, Felix, Civil Engineer, 13, Westfield Terrace, Wallsend-on-Tyne.

Mills, Giles, Engineer, Messrs. North Lincoln Engineering Co., Grimsby.

GRADUATES TO MEMBERS.

James, Matthew C., E. Engineer, 49, Beverley Terrace, Cullercoats, Northumberland.

Readhead, Stanley, Shipbuilder, Westoe Hall, South Shields.

Tait, Robert, Ship Draughtsman, 44, Brisbane Street, Greenock, N.B.

GRADUATE.

Goddard, Charles G. W., Engineer, 14, Railway Terrace, North Shields.

AWARDS FOR GRADUATES' PAPERS.

The CHAIRMAN said—The Council has made the following awards for papers read before the Graduate Section during last Session: £4 to Mr. J. Neill for his paper on "Marine Evaporators"; £3 to Mr. F. W. Green for his paper on "Centrifugal Pumps"; the paper by Mr. J. Neill will be printed in the current volume of the *Transactions*.

The discussion on Mr. J. M. Moncrieff's paper on "Commercial Dry Docks" was resumed.

Mr. ARCHIBALD HOGG read a paper on "The London County Council Passenger Steamers."

RESUMED DISCUSSION ON MR. J. M. MONCRIEFF'S PAPER ON "COMMERCIAL DRY DOCKS."

Mr. EDWARD BOX (by permission of the meeting) said—But for the fact that I have had many years' experience in docks, I should have hesitated to ask to be allowed to take part in the discussion. I have had experience in the designing and construction of floating and graving docks, both for Government and commercial vessels.

Mr. Moncrieff commences his paper by asking what size a dock should be built, for commercial and dividend-earning purposes; wishing to build a dock with some regard to the future, while avoiding the expenditure of capital which might for some time be unproductive. There is one thing certain, before anyone enters upon the construction of a dry dock (commercial or otherwise), it is necessary to come to some definite decision as to the principal dimensions to be adopted, at least as far as those dimensions may affect the future expenditure of capital upon possible extensions. The author explains that there is the trade of the port or place where the dock is to be situated to be considered, and there are, of course, the possibilities of attracting vessels for purely ship-repairing purposes, which is an important factor in the chances of success of the undertaking.

The desirable size of a dock is obtained very largely from statistics, and the chances of attracting vessels for ship-repairing purposes will depend upon the facilities for getting to the dock-yard and for carrying out repair work with the maximum despatch at the minimum cost. Mr. Moncrieff deals with the question from a North-East Coast point of view, and therefore limits the subject. It will be generally conceded that the centre of ship-repairing for the North-East Coast is the Tyne district, and perhaps it will best assist us to a solution of the problem by first considering the dimensions of the principal docks existing in that district.

Existing Docks.—Suppose we consider for a moment the two largest docks on the Tyne, namely, those at Hebburn and

Wallsend. The former is given as 700 feet by 90 feet entrance, and the latter as 550 feet by 80 feet. I propose to refer to these docks in the same way as you might refer to a vessel in terms of proportion of beam to length. Messrs. Stephenson's dock has a length of 7·77 beams, and the Tyne Pontoons' a length of 6·87 beams.

There are at present vessels of greater proportion of breadth to length than the former dock provides, but there are (as far as I have been able to ascertain) no trading vessels worth considering of such proportions as the latter dock provides, and, therefore, I am forced to the conclusion that both these docks were constructed with a view of accommodating vessels other than those which the paper deals with. Now Mr. Moncrieff suggests a dock of 550 feet length, which is the same length as the Tyne Pontoons' dock referred to, and which was for some years the biggest dock in the district. If, in considering the question of width of entrance of such a dock (for present and probable future requirements), then taking the maximum proportion of width to length of vessels at present constructed, this is (with one or two exceptions) 7 beams, and this for a 550 feet length of dock gives $550 \div 7 = 78{\cdot}5$ feet. I have been unable to trace any vessel approaching 550 feet in length with such a proportion of beam as this. I think we may reasonably infer that a commercial dock of such proportion would be well in advance of present and would amply provide for possible future requirements.

Breadth.—Worked out upon the basis I have given, we get a very different proportion to that proposed by Mr. Moncrieff, which is only a proportion of 8·46 beams, say 8½ beams. What proportion vessels of such a length will be built to in the future I do not know, but I think if I were building such a dock as Mr. Moncrieff proposes I should give it a length of 560 feet with a beam not less than an eighth, which is 70 feet. Mr. Moncrieff suggests that it might be advisable to provide for a future extension in length beyond 550 feet, but does not say how he proposes to make provision for a greater width; and surely if the breadth he proposes, namely, 65 feet, is the width desirable for a dock of 550 feet in length, then it would hardly be worth while making provision for extended length unless you had also provided for extended breadth. Mr. Moncrieff does not give

the proposed minimum width inside the dock. I am sorry for this, because to my mind it is rather an important dimension in the design.

Depth.—As regards depth, the depth given in the paper would allow most vessels you would have to deal with on the North-East Coast to enter at any state of the tide. This is rather an expensive luxury, having considerable bearing upon the first cost. For obvious reasons vessels will be kept as shallow as is found practicable, and I am inclined to the opinion that the depth given by Mr. Moncrieff is in excess of what would be required, unless it is contemplated extending very much beyond the length given. It might be worth considering whether the depth could not be reduced 2 feet.

Site.—In referring to the question of site, I hope Mr. Moncrieff does not suggest that anyone should be so rash as to think of selecting a site (anywhere on the Tyne) for another dock, or that those already in possession would be so rash as to add yet another dock to what is a clear case of overcrowding! Assuming, for argument's sake, that the site is in a new locality and that docks are required, then some care should be exercised in choosing a site, for the selection may make or mar the success of the undertaking.

Speaking of the site opens up the question as to what is the most suitable form of dry dock to make the enterprise "dividend-earning." Mr. Moncrieff deals with the question as if there were only one method of dry docking. True, he mentions floating dry docks, but dismisses the question as if it were not worth a second consideration. Without going so far as to say that a graving dock has no advantage over a floating dock, I certainly claim that floating docks can claim distinct advantages, and in some respects are preferable, and for this reason I think the title of Mr. Moncrieff's paper should have been "Commercial Graving Docks," as it is with that form of dry dock that his paper deals. In the selection of a site for dry docks I think it would at least be advisable (to ensure the commercial success that Mr. Moncrieff asks for) not to treat floating docks too lightly, and, if possible, in selecting a site, to select one suitable for both types of docks, and then you will have a better chance of accommodating your customers' views, and less fear of dangerous competitors.

Graving Docks Section.—The four sections of graving docks

given by Mr. Moncrieff, I think you will all agree, is most generous and most interesting. In dealing with the altars one almost wonders why it should be necessary to have so many different arrangements, seeing they fulfil the same functions, but the fact remains that hardly two docks in this respect are arranged alike, even docks of similar size. The lower altars, which Mr. Moncrieff doubts the practical utility of, are very handy for painters' ladders, and, in some docks, to enable one to keep out of the water. It is suggested that they also act as a toe to the walls. Of course, if the altars were not there it would be necessary (Sections 1 and 2, Plate IX.) to have a sloping toe which would be equally efficient in strength as the altars, but in Sections 3 and 4 they could be dispensed with altogether, without, I think, seriously endangering the stability of the walls.

Walls.—Mr. Moncrieff objects to steps or reductions being made in the backs of the walls. If the side walls are designed to have altars for shoring purposes, then this gives the desired reductions in the section for purposes of economy, and there is no need to reduce the backs of the walls in a similar way. There is another way of further reducing the walls, however, and that is by undersetting them, and this can often be done to very great advantage both from the point of economy and facilities of construction. I know of cases where this method has been resorted to in a way I would not think of advising.

To discuss the question as to what is the best section for a dock wall it is necessary to have particulars showing the nature of the ground. From these it is often found desirable to alter or modify the section at various points of the dock. For instance, in many riverside sites the head of the dock would be entirely in cutting, whereas the entrance might be half-cut and half-fill, and in such a case I should invariably modify my wall section. The question is not how much concrete to put in but how much to leave out. It is as well to keep in view the fact that, whereas many engineering works are of greatest strength at time of completion, concrete work requires time to obtain strength, and this leads to more material being used than might otherwise be necessary.

Water (under control) is a good friend; under a dock bottom it is a powerful enemy. Mr. Moncrieff has very aptly referred to the calculations for stability as "finger posts pointing out

the direction of the road to be taken in the design," but has not given any finger posts to direct us, probably preferring we should choose our own road, then if we go wrong the responsibility will be ours. I can assure you it is a very difficult problem to determine the overturning moment of a dock wall. Look at Sections 3 and 4, and try and imagine what would be the force required to overturn the walls, presuming, of course, they have been correctly built.

Bottom.—Mr. Moncrieff gives in Section 1 the treatment where you have a rock foundation. I conclude from the thickness of concrete shown that there was an entire absence of water. For another example of a rock bottom, and where the docks are cut out in the rock, I would refer to a Government dock. Here the dock had fissures in it (water-bearing), and in cases like this careful treatment is necessary to collect the water and carry it away by a system of pipes before the concrete is laid. The rock is sometimes dovetailed out so that the concrete keys into it and is thus assisted in being held down. Providing proper care is taken a good deal of concrete can be saved.

With regard to Section 2, I think I should prefer to graduate the thickness from the sides to the centre portion instead of making the increased thickness so pronounced. Should there be the least possibility of its being depressed, due to the heavy loading upon the keel line, it might cause cracking along the end of the keel blocks where the concrete suddenly alters in thickness. It is not stated what the nature of the ground is. I am assuming it is other than rock.

Referring to Sections 3 and 4, Plate IX., the question of cost rises prominently in the foreground, and I am hoping we shall hear something about " ferro-concrete " construction as applied to graving docks during the discussion. I have used iron and concrete in combination for a dock bottom, but it was for a special purpose and affords no comparison for new works.

Shape of sides.—Referring to the contour of the sides, it has been suggested (not in Mr. Moncrieff's paper) that the sides might be made vertical, but although this would bring the coping nearer the side of the ship and easier to reach, it would hamper light and air and the sides would be less desirable to construct. Again, the present system of shoring would be out of the question. From a shoring point of view the arrangement of altars

shown in Sections 2 and 4 is very adaptable, giving great variation for adjustment of shores to the different widths of vessels.

Shape of Bottom and Height of Blocks.—As regards slope of dock floor, I agree that the floor should slope from the centre to the sides, and as regards height of blocks, it must be remembered that the result is very different in the case of a ship having a bar keel and a ship without. The ship having a keel will give a head room of some 9 inches more than the keelless and flat-bottom vessels of to-day. I do not think less than 4 feet 6 inches on the blocks should be allowed in a new dock. Regarding fore and aft slope, unless there is reason to believe that vessels are going to be built to float on an even keel, I should certainly adopt a slope up towards the head of from ¼ inch to ¾ inch in 10 feet.

Mr. Moncrieff prefers keeping the dock bottom level, fore and aft, and sloping the side gutters. No mention is made as to the position or system of drainage culvert. I think something depends upon this, and also the position of the pump house. I see no reason why the floor should be made level fore and aft, nor do I see any reason why the blocks should not have the same height throughout. The sloping floor is less costly, and if your pumping chamber should be fairly near the entrance, then I see no reason for side gutters, and think it advisable to dispense with them where possible—they often tend to weaken the toe of the side walls, and fill with dirt.

Quoins and Sill.—As regards the quoins, when gates are adopted, I know cases where both granite and greenheart have proved a success. As the greenheart is sunk in the concrete quoins it is well held and bedded, but in the case of the sill the timber forms a curb and I prefer a solid granite sill. Undesirable things will often get shut on to the sill and a timber sill is more likely to be disturbed and water leak through behind the timber. Granite quoins are, of course, much more expensive than a granite sill. Granite makes a first-class job, and money spent on the entrance is well spent. I think if you will take the cost of material and labour in the case of granite and greenheart for dock entrance upon a true and proper basis the granite will not be found to be much more expensive. Of course, experience in carrying out either system may materially affect the cost.

Caissons v. Gates.—As regards caissons *versus* gates, no doubt

the sliding caisson has a great advantage over gates, as Mr. Baterden pointed out, where a good road across the entrance is required, but its cost is seriously against it. For working, no doubt gates are the handiest. Gates having a radial sill must be tiresome to fit and require a big recess to open back into. I would suggest avoiding curved sills "as you would a plague." The old ship caisson has many advantages: it gives a good passage across it and its attachments are simple. One great advantage is that it can be put in a series of stops and, when an outer groove or sill is provided, forms its own dam for allowing the working groove to be readily got at for repairs. Neither gates nor sliding caissons can well accommodate themselves in this way. I am not at all sure that when contemplating the construction of more than one dock, especially in the case of, say, three, it might not be advisable to adopt a caisson for, say, the largest dock that would fit into outer stops beyond the gate recesses of the remaining docks. By this means a dam would be readily formed to get at the sills of all the three docks.

Valves.—I cannot see any great disadvantages in having the valves in the gates, and they certainly do, as usually constructed, weaken the side walls. I know a case where a dock wall cracked right through the valve chamber. To equalize the rush of water and lessen the weakening of the walls why not adopt the "happy medium" and divide your favours between the sides and the gates by having valves of reduced size and more of them?

Roller to Gates.—I quite agree that where buoyancy compartments are provided, as they should be, the roller does not fulfil any useful function while operating the gates, but I am not at all convinced that a pair of massive gates should be allowed to hang their weight upon the dock walls when it can be avoided. It is very satisfactory to be able to shift over forty tons in the way Mr. Moncrieff did, but it must be remembered that the dock walls are most probably being subjected to strains during the period of construction different from those under working conditions when the cofferdam is removed.

Pumps.—As regards obtaining power from a power station, you may experience some little difficulty in getting current from a power station for dock pumping, on account of the heavy call you put upon the station for a short period. Gas engines and

suction plants are reputed to be economical, and, no doubt, very suitable for the purpose. Whether the pumps should be put below the level of the dock bottom, or as conveniently below the surface of the ground as the height of the pumps require, might be a debatable point. In modern Government docks the pump is placed at the bottom of the well. The water rising up the well reaches the main discharge culvert and then flows by gravitation to the outlet. The discharge culvert, therefore, has to be of considerable size. The engines driving the pumps are set on their side and the shaft passing down the well is connected directly to the engine crank shaft. Like floating docks, there is room for a separate paper upon dock pumps and appliances. I pass, therefore, on to materials of construction.

Materials of Construction.—Mr. Moncrieff's remarks coincide very much with my own experience as regards the necessity for making the concrete as homogeneous as possible. Water is a very difficult thing to stop, but it is absolutely essential to sound work that there should be no water with pressure behind in contact with concrete until it is set thoroughly hard. It is not always possible to stop water under these conditions and in that case it must be diverted for the time being.

Mr. Moncrieff does not make any mention of ballast. Now, to produce good work it is most important that the ballast should be clean. It would appear that almost any material may make good concrete. I do not know what proportion the cement was in the case of the two samples I have here, but they are both out of the same wall, are both in good condition and about 25 years of age. The proportions are not known, but it is admitted there was no stinting of cement. [Samples exhibited.]

To illustrate the action of water upon concrete I have another sample. I am told (by one who should know) that there was reason to believe that the cement was conspicuous by its absence. This sample is nearly 20 years old and, like the other samples, has been in contact with sea water.

Brick Lining.—As regards brick lining for dock walls, if it is possible to get good results from concrete alone, and Mr. Moncrieff tells us it is (an opinion with which I agree), then why go to the expense of brick facing? I admit that good bricks in cement mortar make a very strong job, but I am doubtful whether the appearance after a time would be preferable to good

concrete. Very dirty as well as rough work is carried out in a dry dock, and one could hardly expect to find a dock compare with some works after the same number of years.

Altars in Granite.—Excepting for steps, I think granite can be dispensed with, providing the altars are made of specially strong concrete.

Floating Docks.—I will conclude my remarks with a short reference to this type of dry docks. First, let me say I entirely agree with a previous speaker (I think it was Mr. James) that there is room for a separate paper upon this class of dock.

I also agree with the author that "a good deal has been said that won't bear criticism." As regards comparison, of course, it has been pointed out over and over again that the only way to decide this is to investigate every application separately. Probably an advocate of graving docks would require you should (to put the two systems upon an equal basis for comparison) give sufficient capacity to the floating dock to lift a full-size ship loaded. Floating docks are usually designed to lift a ship light, and it is very questionable whether for commercial purposes it would pay to put the extra lifting capacity and probably extra dredging expense into a floating dock to accommodate an occasional loaded ship. But then again, is it worth the extra expense necessary to build the graving dock the extra depth required for the same purpose? Now, I venture to ask, what are some of the indisputable advantages of the floating dock?

Taking a graving dock of the capacity of the one the author proposes, I think three and a half years would be very reasonable as the minimum time of construction. A floating dock, including quay dredging and dock, would probably be built in half the time. A commercial dock of 11,000 tons lifting capacity was actually built in seven and a half months from time of placing the order, and was sunk in place within eight months. Would anyone doubt that ships dry quicker on a floating dock than in a graving dock? Again, is there not in favour of a floating dock the indisputable fact that the water pumped out to raise a vessel is little more than the weight of the vessel? whereas the water pumped out of a graving dock is in the inverse ratio to the size of the vessel. Surely these are points in favour of floating docks which "will bear criticism."

Mr. C. SCHOFIELD said—I am sorry to say that circumstances prevented my being present at the reading by Mr. Moncrieff of the very able paper on "Commercial Dry Docks," but after having read the galley copy I feel sure every one will agree with me that the same is both instructive, concise, and offers very much food for thought, especially to our young men who may be called upon to design works of a similar character to those so ably described in this very interesting paper.

I do not propose to make any remarks on the construction of graving docks proper as described in the paper, as I consider the details of the paper beyond criticism, but to endorse what has been said by Mr. Moncrieff, namely, that each kind of dock, whether it be an ordinary graving dock, built of either stone, concrete or wood, or a floating dock, has its advantages and disadvantages, and must be governed by local conditions.

In the first place, providing a site is obtainable with a good depth of water in front, and a good clay soil, clear of running sand, and, the great enemy of graving dock construction, namely, fresh-water springs, then I say, it would be most unwise to contemplate a floating dock; but if, on the other hand, none of these conditions exist, then the floating dock becomes a necessity. We find in America that a floating dock can be worked more economically than an ordinary graving dock, as, having only a rise and fall of tide of about four feet, it follows that in a graving dock of any magnitude the weight of water to be pumped is something enormous, as the smaller the vessel docked, the larger amount of water to be pumped. I have in my mind the large graving dock situated at Newport News, Virginia. Whereas in the case of the floating dock the weight of the water to be pumped is the weight of the vessel to be docked plus the weight of water contained in the lateral sides and sufficient to give the base of the dock, say a 4-inch freeboard. This, on an average (taking all sizes of vessels docked), cannot be more than 50 per cent. of the water pumped in an ordinary graving dock, and this amount is curtailed in a dock similar to the one used at the Messrs. Smith's Dock Company, at North Shields, as one lateral side is dispensed with. This, in my opinion, is one of the greatest departures in floating dock construction made in the present age, as it not only dispenses with one lateral side with the water it contains, but in the original design it transfers the

balancing power from the vertical to the horizontal, by means of a double pontoon connected to the remaining lateral side, with booms placed parallel to each other. An example of this kind of dock is working at Sevastopol, and is the joint invention of Latimer Clark and John Stanfield.

I will conclude by remarking that, in my opinion, in the floating dock of the future the remaining lateral side will be dispensed with, and when this transpires we shall have a floating dock that can be moved from one port to another in any ordinary weather without the danger of being blown ashore, as is the case with a dock having lateral sides as at present constructed.

It will be in the minds of many here that the floating dock recently built on this river for Durban came to grief within a few miles of its destination. Also, at the present time as I make these notes, grave fears are entertained for the safety of the Dewey Floating Dock built in America and at present on a voyage to the Philippines, and this danger must continue so long as we are compelled to take to sea floating docks with lateral sides exposed to the action of the wind and seas. In the case of the Dewey Dock the lateral sides are almost equal in size to the sail area of a full-rigged ship, which, of course, cannot be taken in in cases of emergency. So it naturally follows that, to have a safe navigable dock, we must look to some other means of balancing the dock during the process of lifting and submerging than lateral sides. When this is accomplished, then the second claim put forward by Mr. Moncrieff will have some value.

If I am not taking up too much time, I should like to mention the fact that the question of lateral sides has always been one that has claimed the special attention of dock designers, and the sides have assumed all kinds of forms in order to obtain the greatest amount of stability with the least weight, and commencing with a small balancing area at the top and gradually increasing to the base.

It will be in the knowledge of the older members, that the late Sir Frederick Bramwell actually constructed a floating dock without lateral sides proper. The method he adopted in the St. Thomas Dock was as follows: In the place of the inner and outer skin of the lateral sides he substituted four open lattice

girders, running parallel the whole length of the dock. Inside these girders he placed shallow pontoons extending the whole length of the dock, about six feet deep and with a sectional area the breadth of the ordinary lateral sides. These pontoons were worked up and down by powerful screws (as the dock was lifting or submerging) and kept half submerged; thereby taking the place of the lateral sides at the water level, and effectually balancing the dock (see sketch).

The object was twofold, namely, to present the least resistance to the very violent winds experienced in the West Indies, and to save the pumping required to empty the lateral sides.

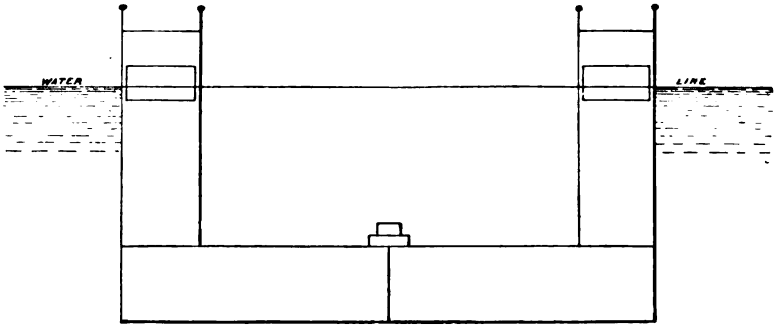

The first object was attained, but, in practice, it was found that it required about the same power and cost to work the screws as would be needed to pump the lateral sides.

I am strongly of the opinion that, as stated by Mr. Moncrieff and supported by Mr. James, it would be most unwise and certainly a most dangerous thing to take a floating dock to the mouth of a harbour to attempt the operation of docking a vessel there. The only thing that would justify such an attempt would be in the case of a waterlogged vessel that could not reach a dry dock, and, we may assume, such a vessel would have a heavy list, and the beach would be the proper place to prepare her for docking.

In my opinion any floating dock, to be of practical utility in meeting the claim as a mobile structure, should have no lateral sides exposed to the winds and seas; should be able to proceed to sea in any ordinary weather; should be able to steer a given

course, with a very small proportion of leeway; and, if occasion required it, should be able to sail from one port to another.

In my opinion such a dock is quite feasible, and of such a dock I may have something to say on a future occasion.

The SECRETARY read the following communication:—

SUNDERLAND,
16th March, 1906.

DEAR MR. DUCKITT,

Size of dock, width, entrance, and depth in sill must be largely decided by the possible or probable exigencies of the port. For instance, although large vessels are built on the Wear, they rarely return. It is an export port for coal only, the river is not likely to become suitable for large types of vessels, and if it ever becomes a distributing port it will only be for Danish produce, Baltic timber, etc. On the Tyne it is different, the size and types of vessels built on that river and those trading to the port render it necessary to have larger docks. Site and design must of course, as the author states, very largely depend upon the exigencies of the case. I do not propose to discuss details but would refer to one or two points suggested by the author and referred to again by Mr. James.

The author (page 123), after giving his views as to the size of dock, admits that they might not apply in the case of a dock attached to a large shipyard, where it may be desirable to provide accommodation for the largest vessels they may build.

But Mr. James says: "It is questionable whether it is advisable to have dry docks associated with shipyards. On the face of it, it would seem so, but repair work is now so extensively specialised that the opposite has proved to be the best so far as economical working and general financial results are concerned; and it is found now that specially trained and experienced workmen are necessary for carrying out ordinary repairs to ships' hulls, engines and boilers." Now I have found that repair work can be done quite as economically in graving docks attached to shipyards as elsewhere, besides which, you have the great advantage of a *better* supply of "specially trained

and experienced men," owing to the fact that the repairing department, in cases of extensive damage and important repairs, is able to draw from the shipyard and therefore in a much better position than many establishments who do repairs only. It also generally happens that repairing departments in connection with shipyards have the advantage of more machinery and also machinery of the most modern type. The shipbuilder has found it absolutely necessary to adopt the latest and best appliances in order to compete with his confrères, and therefore, if he has a graving dock as well, his repairing department, and his customers too, will reap the advantage. Please do not misunderstand me, I do not for one moment wish to make any invidious distinction between repairing establishments attached to shipyards and those which are independent. I only make these remarks because I do not think Mr. James quite meant what his words might convey.

The second point I wish to refer to is the question of floating docks, and first of all let me refer to the author's remark that: "The second claim is that the floating dock can be sent down a river or out into a harbour to meet and take on damaged vessels." Now I do not for a moment think that any dock owner would seriously think of having a floating dock which he could tow about to meet sinking ships. The commercial disadvantages are so many and so obvious that I need not waste your time in referring to them, but Mr. Lionel Clark, in a paper which he read before the Institution of Civil Engineers, in January, 1905, said:—"From a strategical point of view, the mobility of a floating dock opens up many possibilities. For obvious reasons naval arsenals are generally located at some distance from the sea, where they can be approached only by a narrow and easily defensible channel. The very safety of such a channel may, however, become a danger, when it has to be navigated by the nation's ships, half water-logged after a general engagement; for it might easily be blocked through one of these 'lame ducks' foundering, or indeed, merely grounding through failure of damaged steering tackle. If such an arsenal possessed a floating dock, the dock could be sent down to the river's mouth to pick up the ship, and patch it sufficiently to allow it to navigate the narrows and attain the safety of the arsenal." Mr. James says: "That many of the claims put forward for floating

docks will not bear criticism, and the wild statements referring to comparative cost cannot be maintained."

Now there are two firms in this district who have not made any wild statement as to the comparative cost of their pontoons, and although they have not cost any more than a graving dock would have done, they admit that in adopting a pontoon they were influenced by the peculiarities of their particular sites, which lent themselves to pontoon rather than graving dock. I cannot admit either that a pontoon is unsuitable for extensive repairs, it is quite possible to construct a pontoon dock which will enable you to repair a badly damaged ship and restore one mis-shapen to her original condition, and although I do not hold a brief for one type over another I want to impress upon you the fact that from a shipowner's point of view it is not by any means disadvantageous to have a ship repaired upon a pontoon. I could point out several advantages in the pontoon dock, but prefer to suggest your perusal and consideration of Mr. Clark's paper before mentioned and also the discussion thereon.

I would, however, mention one or two points, namely, the fact of the pontoons in use in this district being L-shaped and open at the ends, and the vessel being raised above water-level enables it to dry more quickly and gives the paint a better chance and, secondly, that you can lift a vessel so quickly that you can execute work which is impracticable in any graving dock in this district. For instance, one evening we undocked one vessel, docked another of 5,000 tons deadweight, opened out and examined her sea cocks, etc., undocked her and finally redocked the first mentioned vessel and she was dry again in less than 4 hours from starting the operation.

Mr. Moncrieff, referring to the construction of timber quays along at least one side of the pontoon, says: "It also requires to be taken into account that to construct timber quays to carry heavy loads, such as travelling cranes of the dimensions now deemed desirable in connection with docks, would cause this single item of cost to be the reverse of insignificant," and again: "That the timber quays alongside the floating dock demands that the workshops and sheds of the dockyard shall either be at a considerable distance from the dock or shall be of a relatively light type."

given by Mr. Moncrieff, I think you will all agree, is most generous and most interesting. In dealing with the altars one almost wonders why it should be necessary to have so many different arrangements, seeing they fulfil the same functions, but the fact remains that hardly two docks in this respect are arranged alike, even docks of similar size. The lower altars, which Mr. Moncrieff doubts the practical utility of, are very handy for painters' ladders, and, in some docks, to enable one to keep out of the water. It is suggested that they also act as a toe to the walls. Of course, if the altars were not there it would be necessary (Sections 1 and 2, Plate IX.) to have a sloping toe which would be equally efficient in strength as the altars, but in Sections 3 and 4 they could be dispensed with altogether, without, I think, seriously endangering the stability of the walls.

Walls.—Mr. Moncrieff objects to steps or reductions being made in the backs of the walls. If the side walls are designed to have altars for shoring purposes, then this gives the desired reductions in the section for purposes of economy, and there is no need to reduce the backs of the walls in a similar way. There is another way of further reducing the walls, however, and that is by undersetting them, and this can often be done to very great advantage both from the point of economy and facilities of construction. I know of cases where this method has been resorted to in a way I would not think of advising.

To discuss the question as to what is the best section for a dock wall it is necessary to have particulars showing the nature of the ground. From these it is often found desirable to alter or modify the section at various points of the dock. For instance, in many riverside sites the head of the dock would be entirely in cutting, whereas the entrance might be half-cut and half-fill, and in such a case I should invariably modify my wall section. The question is not how much concrete to put in but how much to leave out. It is as well to keep in view the fact that, whereas many engineering works are of greatest strength at time of completion, concrete work requires time to obtain strength, and this leads to more material being used than might otherwise be necessary.

Water (under control) is a good friend; under a dock bottom it is a powerful enemy. Mr. Moncrieff has very aptly referred to the calculations for stability as "finger posts pointing out

Mr. Moncrieff states that there has been a great deal said about floating docks which will not bear criticism, and gives as an example, that it has been frequently stated that the floating dock is less costly to construct than the dry dock. As a matter of fact it would be very difficult to make a reliable comparison between the cost of a dry dock and that of a floating dock, owing to the difficulty in comparing the capabilities of the two docks. For instance, take the case of a dry dock of the dimensions proposed by Mr. Moncrieff, as being most suitable for the Tyne, namely, 550 feet long, and 65 feet width of entrance. Such a dock would not take a vessel 551 feet long, whereas a floating dock could take a vessel with any reasonable length of overhang, and it is astonishing what an amount of overhang modern ships will stand. Speaking generally, however, the cost of a floating dock can be accurately estimated before commencing to build, with the certainty that the cost will not be exceeded; but how often on the Tyne alone has the cost of a dry dock greatly exceeded the estimated cost!

With regard to the amount of excavation required for the floating dock being greater than that for a dry dock, this is true under exceptional circumstances, but usually the depth of the pontoon would not exceed the thickness of the invert of a dry dock, allowing for an equal height of keel blocks in each case.

Powerful electric or hydraulic cranes can and have been placed on several floating docks, so that no excessive piling or timbering is necessary for the shore work near the dock.

With reference to the claim that a floating dock could be sent down a river, or out into harbour to take up damaged vessels, this, strange as it may appear, is no bombastic statement. It has, in principle, been actually accomplished. H.M. Bermuda Dock was towed round from the Tyne to the Medway, temporarily moored, and H.M.S. "Sans Pareil" safely and expeditiously docked as part of the contractor's trials, after which the dock was sent on its voyage to Bermuda. This could equally well be accomplished with any ordinary double-walled pontoon, as they are self-contained as regards pumping plant, etc., and provision for temporary repairs to enable a lame duck to reach harbour in safety could easily be carried on any pontoon. However, the feasibility of taking a pontoon to meet a damaged ship

has only been suggested in the case of a naval station, say in war time, when desperate necessity calls for desperate remedies.

With reference to the carrying out of heavy repairs to badly damaged ships, and the possibility of the floating dock accommodating itself to the distorted ship, it is well known that such a thing has happened to a slight degree on a floating dock in this river on a single-sided dock. It cannot, however, be denied, that very extensive bottom repairs have been carried out on floating docks and also very important lengthening jobs, as for instance, to the Nord Deutscher Lloyd liner "Kaiserin Maria Theresa," formerly the "Spree." There is no work of any description that can be carried out on ships in a dry dock which cannot with equal or even better facility be done on a floating dock. Much more can be said in favour of floating docks *versus* dry docks, only it is not the intention of the present paper to go deeply into this question, but the subject having been introduced and discussed by previous speakers, I trust that the foregoing remarks in vindication of the floating dock, by one who has had considerable experience in their construction and working, will not be out of place. I thank Mr. Moncrieff for his very valuable and instructive paper.

Yours faithfully,
HARRY R. JARVIS.

The CHAIRMAN (Mr. R. Saxton White) said—The discussion will be adjourned until next meeting, when Mr. Moncrieff will reply. We have had very valuable contributions to the *Proceedings* of this Institution to-night, both oral and written. This class of paper adds considerably to the value of the *Proceedings* of the Institution, and will be of great assistance to the men who are engaged in such undertakings and who are thus able not only to take advantage of previous successful work, but also lessons from work which may not have been quite so successful, so avoiding disastrous results in the future. Mr. Box suggested that an extension of graving docks would be much more useful if they could be extended in the direction of breadth rather than length. However desirable this might be, the cost of such an extension must necessarily be extremely high as compared with an increase in the length. As bearing on the question of caisson *versus* gates, many years ago in a dock on the west coast, where the

rise and fall of tide is very great, the graving dock had a caisson which was built in a form I imagine very few civil engineers to-day would adopt. It had a rectangular section very narrow in proportion to its depth, with the result that the floating of the caisson became a much more important question than the docking of a steamer. The caisson required so much water ballast and therefore draught of water that the useful period for working the dock was very greatly curtailed. I offered the suggestion of adding a chamber on each side of the caisson, thereby increasing its beam and reducing its draught of flotation, thus greatly increasing the useful period of working the dock, or even its continual use during spring or neap tides. This condition may or may not exist at the present time, but it points to the necessity, when caissons are adopted for dock entrances, that they should be properly designed. I give the instance as bearing on the points brought forward by Mr. Moncrieff in his paper, wherein he recommends the adoption of gates. In that I agree, unless the floating caisson is designed with proper ideas as to flotation and stability. This being provided for, the caisson has the paramount advantage that in case of an accident to a vessel whilst in the dock, the water can be retained within the dock until measures can be taken for a remedy to be applied. This is of course impossible when the gates are fitted, as these can only keep the water out of the dock, and in case of accident the vessel must be left to settle on the blocks or in such position as she may take the dock bottom as the tide recedes, and she may sustain greater damage in this way than that which may have originally necessitated the docking.

The discussion was adjourned.

THE LONDON COUNTY COUNCIL PASSENGER STEAMERS.

By ARCHIBALD HOGG, Member.

[Read in Newcastle-upon-Tyne, on Friday, March 16th, 1906.]

The designing of suitable and economical steamers for the Thames passenger traffic at London was one of those interesting problems that every now and then come before naval architects. Had the shipbuilders been given a free hand, this problem would have afforded every opportunity for the exercise of all their knowledge and inventive faculties, but the significance of this fact does not seem to have been appreciated by the London County Council when they approached the builders for tenders, as they apparently satisfied themselves, with the minimum of external aid, as to the size and type of steamer which they gave to the builders, with hard and fast conditions as to the speed, draught of water and number of passengers to be carried, etc., that is, they practically fixed the design and dimensions of the steamers. They received in return a large variety of different proposals, which was a good indication of the difficulties in the design. Those builders whose designs most nearly fulfilled the stipulated conditions were asked to give a second tender and were each provided with copies of the same definite plan and specification of hull and machinery, giving all dimensions, thus relieving the builders from all responsibility for the successful working of the steamers. Their duty was performed when they produced the hull and machinery to the sizes given and had proved that the stipulated speed could be obtained.

Now the shipbuilder's business is to design as well as build steamers, and they usually give freely whatever design is necessary on receipt of certain information. They could therefore have been given such conditions as would have allowed them an absolutely free hand in determining the type and size of steamer. They could have been furnished with a plan of the river showing the landings with the distances between, the speed of the river current, and also some idea regarding the probable average number of passengers to be carried over a

given time, in short, all particulars affecting the running of the steamers. It may be taken for granted that scarcely two builders would submit exactly the same proposal, and the London County Council would thus have received, gratuitously, the valuable opinions of the shipbuilders. With this information before them they could have made a proper comparison and could have ascertained the relative economy of the steamers before embarking upon the scheme. The conditions to be fulfilled by the steamers, as fixed by the London County Council, were verging on the impossible. All shipbuilders know what this means as regards the first cost and the cost of running the steamers.

The Council's steamers were designed with too great a speed on the specified length of vessel and draught of water, and are consequently almost as uneconomical as it is possible to make them. The following instance illustrates how nearly the design approached the impossible limit. With the view, no doubt, of making the steamers quite up to date, the specification called for an electric light installation, the plant for which would weigh over 1¼ tons. The length of the steamer being restricted, it follows that the form of the hull must be increased in fulness in order to make up the necessary displacement. This extra fulness increases the resistance and requires an addition of about 10 indicated horsepower (I.H.P.) to the propelling machinery in order to propel the steamer at the 13 miles per hour, but this in turn means a further increase in the form and consequently a further addition to the horsepower to propel it at the 13 miles per hour. It is probable that, at the very least, from 15 to 20 I.H.P. is used solely on account of having to carry the electric light plant. The cost of this extra propelling machinery is about £100 per steamer, or a total of £3,000, which, together with the cost of installing the lighting plant, is the actual cost incurred by fitting the electric lighting installation. And this is not all, as there is yet to add the yearly cost of the extra coal consumed, which is about £60 per steamer, or a total of £1,800 per annum, due solely to carrying the plant. Thus we see what a large price is paid and is being paid for the luxury of up-to-date lighting.

It will be readily understood that in a steamer of this nature a very considerable increase in the horsepower of the machinery

is required to increase the speed by ¼ mile per hour. The specified speed was 13 miles per hour on trial, but the specified machinery proved sufficient to propel the steamer at 13¼ miles per hour. At first sight the addition of ¼ mile does not appear excessive, but when it is examined we find here another instance similar to that mentioned above. The trial results show that a smaller horsepower would propel the vessel at the 13 miles speed on the same form and displacement. This figures out at about 266 I.H.P., so that 34 I.H.P., or 13 per cent., is absorbed in getting the extra quarter of a mile, which means that more weight of propelling machinery is being carried than was necessary. If the form of the hull had been fined down, reducing the displacement correspondingly, the 13 miles could have been obtained with even less horsepower, and thus a still further reduction could have been made. This goes on until a point of equilibrium is reached. This point is such that with machinery of about 230 I.H.P. the required speed of 13 miles per hour could have been obtained without altering the dimensions or the carrying power of the steamer. If this machinery had been fitted instead of the larger 300 I.H.P. engines, the reduction in the first cost would have been about £10,000, and the saving in the yearly bill for coal about £5,500 on the 30 steamers.

Another point in the design is the type of engines adopted. These steamers ply in very shallow water and consequently the hulls were constructed of material of very light scantlings, but this does not imply any weakness of the hull itself. What I call in question is the wisdom of fitting "paddle" machinery of 300 I.H.P. into hulls of such scantlings. The wear and tear due to the large engines and to their many stoppages and starts must be considerable and is bound to necessitate abnormal repairing. If screw engines and of the smaller power had been fitted the abnormal wear and tear would have been greatly decreased and the vessels would have been equally easy to handle.

Again, with respect to the number of passengers to be carried, the London County Council fixed this at 500 and the boats were designed to carry 26 tons deadweight at a speed of 13 miles per hour on trial, with a length of steamer of about 134 feet overall, on a draught of water of 2 feet 10 inches. Assuming 3 tons for coal, etc., the remaining 23 tons weight would allow say 400 passengers on board, so that with 500

passengers on board the draught of water would be about 2 feet 11½ inches.

The given requirement of 500 passengers fixes the deck area independent of any question of draught of water, and thus the decisive factor in this design is the question of economic propulsion. The constant obtained by the Admiralty formula, $D^{\frac{2}{3}} \times \frac{V^3}{P}$ is a sure guide to the economy of the design, and in these paddle steamers it works out at a little over 130. Now this is not an economical constant for a steamer which has to do such work, and at the early stages in the proposal this fact should have received consideration, with a view to modifying the design of steamers to carry fewer passengers at a lesser speed.

The type of steamer required for work in the Thames is not really what is usually understood by the term "River Passenger Steamers." Consequently, a vessel having a capacity similar to that of a street car, or rather larger, with a service at frequent intervals between the landings, would perhaps be more likely to meet the requirements of the traffic. Such a steamer is illustrated on Plate XVIII. The dimensions are: length, 90 feet between perpendiculars; beam, 13 feet; depth, 5 feet; and the vessel has one deck only for passengers except in way of the saloon, which is sunk into the hull with a raised roof upon which passengers may sit. Twin screw propellers are used instead of paddles, thus saving the weight of paddle boxes, sponsons, etc. This steamer would carry 150 passengers at a speed of 12 miles per hour with about 75 I.H.P. on a draught of water of 2 feet 10 inches, while the deck area provided allows for a maximum of about 200 passengers. It is probable that, while employing the same number of boats, they would carry, on an average, as many passengers as the present boats do. They would cost less and would be much more economical in the consumption of coal, etc. The saloon could be lightly panelled and the seats upholstered with cushions, while some of the steamers could be fitted with refreshment bars. Thirty of these steamers would cost about £95,000 less than the present boats, the yearly coal bill would be about £17,500 less, the other expenses, including insurance, would be correspondingly reduced and the cost of upkeep repairs would be greatly curtailed. If 30 steamers were not sufficient to meet the traffic at certain times more vessels could

be added. The fleet would be much more manageable with a larger number of smaller boats, and could be increased or curtailed as desired, which it cannot be at present without seriously impairing the service. These ninety-feet boats are suggested as the largest size that should have been utilised, but it is probable that much better results might be expected from smaller vessels.

I do not wish to imply that any of these smaller steamers would have been entirely successful.

DISCUSSION.

Mr. F. H. ALEXANDER said—The paper just read ought to be of interest because of its bearing upon the trials of the overburdened ratepayer. It is said that in a multitude of counsellors there is wisdom; but it depends upon the kind of counsellors; and Mr. Hogg seems to suggest that if shipbuilders had been the counsellors in the case before us, the London ratepayers might have had reason to be better satisfied.

Certain of the technical points in the paper merit remark. Mr. Hogg says that the steamers were designed with too great a speed on the specified length and draught of water. Now, so far as length is concerned, there are many vessels of somewhat similar type whose speeds are higher in relation to the square root of their length; such, for instance, as the passenger steamers on the Firth of Clyde owned by the railway companies; and the draft of some of these vessels is also relatively as light as that of the London steamers, in so far as its relations to length and to speed are concerned. Perhaps it would be more correct to say that their displacement was large for the dimensions given, and that the form was too full for the speed in consequence.

In a case of this sort, the problem for the naval architect may be put as follows: Given a maximum length and draught, and a minimum beam and speed (the minimum beam being required for deck space on the given length), how may we find the least displacement and the least power with which the speed can be obtained? I venture to suggest a graphic method of solution which I will now explain. The diagram (Plate XIX.) shows a curve, A, whose abscissae are displacements, and whose ordinates are indicated horsepowers for the given speed on the given length, beam, and draft. Curve B is similar, but is that for a

vessel of greater beam and, therefore, of finer coefficient for any given displacement. D is an ordinate drawn at the displacement weight given by the sum of the hull weight and deadweight, but excluding the weight of machinery. Curve C is obtained by setting off the weight of machinery for 300 I.H.P. (say) from d_3 to c_3 and the weight for 200 I.H.P. from d_2 to c_2 and so on; so that the curve, C, shows the total displacement with machinery of any given power.

Now, this kind of diagram gives the following information in a graphic and easily understood form:—

(1) The point where C cuts A determines the least displacement (about 113 tons) and the least power (about 230 I.H.P.) with which the given speed can be attained (on the specification which causes weights D and C).

(2) The point where C cuts B determines similar values if the beam were increased as for curve B.

(3) The horizontal distance between A and B (such as x_1 x_2 on 300 I.H.P.) determines the extra displacement which increase of beam allows on a given power. Part of this extra displacement would be needed for weight of hull due to increase of beam, but the other part would allow for the extra deadweight carried on the increased area of deck.

(4) Any decrease of weight of hull, deadweight, or machinery weight, would allow of D and C being slid back to the left to cut A or B at lower points. Similarly, the effect of an increase of weights would be shown in the opposite direction.

(5) The impossible condition would be shown when curve C passed entirely to the right of A, but even then increase of beam would remove the critical stage to a higher displacement when C passed to the right of B.

(6) Ordinates above A, and between A and C, show reserve power.

The utility of such a diagram is manifest, but in order to obtain accurate values for the curves A and B, thoroughly well digested and analysed data are required. These would best be obtained from the results of resistance experiments on the forms of actually tried vessels, so that the propulsive efficiencies as well as the resistances could be referred to.

The actual displacements of the London steamers have not been made public, but if, as seems possible, they are too full in form, one might venture to suggest that if some of the money

expended on them had first been devoted to assisting the establishment of a national experimental tank for the use of our shipowners and shipbuilders, this money and more might have been saved in the end.

I wish to make it clear that the diagram I have drawn does not refer to actual figures for these vessels, but is only intended to illustrate a method of solving the problem as I stated it.

Mr. Hogg's figures for the Admiralty constant, namely 130, I am not prepared to accept, because, at a speed of 13 miles an hour (11·285 kts.), it would mean a displacement of about 140 tons, and at 13¼ miles 130 tons. Now 140 tons means a block coefficient of ·76, and even 130 tons means a coefficient of ·71, and these coefficients are, I am sure, too high. Even the waterplane coefficient (judging from published plans) is only about ·72, and the displacement is not, I think, likely to exceed about 120 tons, giving a coefficient of about ·65.

Some years ago a paper was read before this Institution by Mr. Hök, and not long ago Mr. Tennyson D'Eyncourt read one before the Institution of Naval Architects, giving methods for determining a suitable block coefficient for a vessel of given length and speed. Taking their formulae we obtain ·56 as a suitable coefficient in the present case. I think, however, that, in vessels of such shallow draft as these, experience points to safety in giving to a somewhat fuller form than this.

The diagram given above shows that there is a point in the increase of displacement at which the power for a given speed rises rapidly, and Mr. Hogg indicates rightly that it is just at that point that great importance is to be attached to every possible saving of weight.

Turning now to the question of paddles, which Mr. Hogg thinks should give place to screws, I think he will find that even yet there is a good deal of difference of opinion. It is true that screws have been successfully tried on many rivers, and I hope that Mr. Cherry may be induced to tell us something about their use on our own river. The extra stopping power of paddles is useful, the sponsons are useful alongside stages (although rudimentary ones may be fitted to serve the same purpose on screw steamers if desired), and some maintain that no other method of propulsion gives such manœuvring power in the narrow waters of a river. By dispensing with paddles, weight may be saved both in hull and in machinery, and screws are

usually more efficient. With such shallow draft, however, as in the vessels we are discussing, I should think the use of them in tunnels closed by the Yarrow flap, would be more effective than the open type shown in Mr. Hogg's 90-foot design.

As regards weight saving, there is one little thing which might possibly be done away with. I am not able to say offhand to what extent the Board of Trade compels boats of this type to have lavatory accommodation, but I cannot see why that fitted on the landing stages should not be considered sufficient, unless there is such compulsion. We do not need this sort of accommodation on the trains between here and Hartlepool, for instance, not even for the men working the train, so why should it be required on the steamers, making a journey of similar duration, with stops at similar intervals.

As to Mr. Hogg's design, there may be a good deal to be said in favour of smaller sized boats running at more frequent intervals rather than larger ones less often. The corporation tramcar services in this and other towns are being worked on that principle, but there are arguments which apply to steamers that do not apply to tramcars. The suggestion is worth discussing although the policy involved is one which the local circumstances of a service must ultimately decide.

The CHAIRMAN (Mr. R. Saxton White) said—The discussion will now be adjourned until the 20th April. In regard to the suggestion that Mr. Hogg puts forward as to a large number of smaller boats, that has been carried out with complete success on the Alster at Hamburg. There, of course, they are working on an enclosed water area and there is no question of tide to complicate the question, but there you have boats plying about the whole day long, and you can step on to a boat pretty nearly as often as you can on to a tramcar. Although it may not be possible to get such a service on the Thames, I think the possibility of successful competition by steamers on the Thames must meet similar requirements. People going on to a stage will not wait a quarter of an hour or twenty minutes for a steamer, but will immediately go to the nearest railway station and so get more quickly to their destination.

The discussion stood adjourned, and the meeting dissolved.

NORTH-EAST COAST INSTITUTION OF ENGINEERS AND SHIPBUILDERS.

TWENTY-SECOND SESSION, 1905-1906.

PROCEEDINGS.

THE SIXTH GENERAL MEETING OF THE SESSION WAS HELD IN THE LECTURE HALL OF THE LITERARY AND PHILOSOPHICAL SOCIETY, WESTGATE ROAD, NEWCASTLE-UPON-TYNE, ON FRIDAY EVENING, APRIL 20TH, 1906.

W. H. DUGDALE, ESQ., VICE-PRESIDENT, IN THE CHAIR.

The SECRETARY read the minutes of the previous General Meeting, held on Friday, March 16th, 1906, which were confirmed by the members present and signed by the Chairman.

RETIRING OFFICERS.

The SECRETARY made the following announcement:—

In accordance with Article X. of the Constitution, the following gentlemen will retire from the Council:—

President—The Right Hon. Lord Armstrong (not eligible for re-election).

Vice-Presidents—Messrs. J. R. Fothergill, J. M. Rennoldson and R. L. Weighton (eligible for re-election).

Hon. Treasurer—Mr. G. E. Macarthy (eligible for re-election).

Members of Council—Messrs. D. Andrew, C. A. Bushell, and H. Walker not eligible for re-election as Members of Council, and Messrs. D. R. Macdonald and R. Saxton White eligible for re-election.

NOMINATIONS BY THE COUNCIL.

In accordance with Bye-law 11, the Secretary, on behalf of the President and Council, nominated the following gentlemen to be balloted for to fill the vacancies.

President—Mr. W. H. Dugdale.

Vice-Presidents—Messrs. D. Andrew, C. A. Bushell, J. R. Fothergill, J. M. Rennoldson, H. Walker, R. L. Weighton (three to be elected).

Hon. Treasurer—Mr. G. E. Macarthy.

Ordinary Members of Council—Messrs. J. M. Allan, E. C. Champness, G. Jones, D. R. Macdonald, D. Myles, J. L. Twaddell, and R. Saxton White (five to be elected).

There were no further nominations.

COMMERCIAL DRY DOCKS.

Further discussion on Mr. J. M. Moncrieff's paper on "Commercial Dry Docks" was invited, but there was no response, and the discussion was closed.

The SECRETARY announced he had received a telegram from Mr. Moncrieff stating he was sorry he could not be with them that night, but that he would reply at next meeting, or at any rate, by letter.

The discussion on Mr. Archibald Hogg's paper on "The London County Council Passenger Steamers" was resumed and closed.

THE LONDON COUNTY COUNCIL PASSENGER STEAMERS.

The CHAIRMAN asked for further discussion on Mr. Archibald Hogg's paper on "The London County Council Passenger Steamers."

The SECRETARY read the following communications, which he had received on the subject:—

THE GROVE, BENTON,
NEWCASTLE-UPON-TYNE,
19*th April*, 1906.

DEAR MR. DUCKITT,

I regret that I shall not be able to be at the meeting to-morrow night, and therefore send you the following comments on the paper by Mr. Archibald Hogg on "The London County Council Passenger Steamers":—

Mr. Hogg's object in writing this paper is not stated, but it amounts on the whole to a condemnation of the size and type of boats and machinery adopted, and concludes with a proposed alternative size and type as being much better suited for service on the Thames. After all, this is only a matter of opinion, and the L.C.C. may be allowed to have considered, as carefully as the average shipbuilder throughout the country would have done, all the *pros* and *cons*, when they fixed on boats to carry 500 passengers.

That a much too sanguine estimate of the traffic to be expected has been made is now a matter of notoriety. It is very easy to criticise results after they are accomplished, but that any shipbuilder would have been in any better position or competent to dispute the original proposals in this respect and venture to suggest another scheme, is a matter very much open to question.

Without having any desire to appear as an apologist for the L.C.C., there are several points in the paper to which attention might be called. It is not quite in accordance with fact to say

that the L.C.C. fixed all the dimensions for hull and machinery, thereby relieving the builders from all responsibility for the successful working of the steamers, for, as a matter of fact, the Clyde shipbuilders on their own account increased the breadth of their steamer by six inches over the dimension given by the L.C.C., and fined the ends, and by doing so it is understood they considered they could more safely undertake to fulfil the onerous conditions attaching to the trials and thereby lessen the responsibilities devolving upon them. The frame spacing, also, in the thirty vessels is not all alike; and, so far as the machinery is concerned, no dimensions were given at all.

Mr. Hogg also questions the wisdom of having fitted electric-light installations on board, and proceeds to show approximately the effect which this had on the design, but surely he would not have had a preference for the saloons of the steamers fitted up with evil smelling oil lamps in this year of grace.

Mr. Hogg further refers to the excess speed realised on trial, and to the percentage of I.H.P. required to obtain this, concluding therefrom that the machinery was unnecessarily heavy. It should be pointed out, however, that this increase in speed and power was realised mainly by the builders having provided in their design for increasing the revolutions above the normal, and revolutions is a factor which has no bearing upon the weight of machinery at all. It should also be remembered that the contractors had severe penalties to meet had the speed not been realised, and they are certainly not to be blamed for having had a little in hand, besides, it is well known that the power developed on trial by most steamers averages about 15 per cent. more than is developed under normal working conditions, and the 13 per cent. excess power Mr. Hogg calls attention to, agrees fairly well with this figure.

As to the design of machinery, it is usually considered that where there are many starts and stoppages the paddle engine is superior, as the vessel is more sensitive and responsive to paddles than to a screw at these times, which is a matter of great moment on the Thames, crowded as it is with barge traffic like no other waterway in this country.

I should have thought also that the wear and tear of large engines is relatively less than that for small engines of the same power, for, assuming the working pressure to be the same, the larger engine would necessarily be running slower and easier.

In conclusion, it may be remarked that the author condemns the designed speed of 13 miles per hour, on a specified length of vessel of 130 feet, as being excessive and the most uneconomical possible, yet, as an alternative, he proposes vessels having a speed of 12 miles per hour on a length of only 90 feet. The probability is that the proposed vessels would be quite as inefficient as those he condemns, if, indeed, they would not be more so.

Yours faithfully,

R. A. MIDDLETON.

ST. PETER'S YARD, ST. PETER'S,
NEWCASTLE-UPON-TYNE,
20th April, 1906.

DEAR MR. DUCKITT,

As Mr. White informs me he will not be present at your meeting to-night and unavoidably myself being away, I should feel much obliged if you will kindly read the few remarks I have made upon the question of London steamers. Drawings also I include with letter attached,* which you may consider also interesting, as it more fully describes my reasons for the designs submitted to the L.C.C.

Yours faithfully,

THOMAS W. CHERRY.

* Extract from letter alluded to (dated May 17th, 1904):—

It is my opinion that any type of boat, such as a river service for the Thames is entitled to, that embodies the old cabin style under deck practice, will not again be popular.

The public are now educated by the modern means placed at their disposal in the electric corridor trains and trams to a condition of comfort, cleanliness and speed, which, in my opinion, must be aimed at on water: and not only do these new conditions easily lend themselves for embodiment in a river steamer but, by their adoption, the ship can be made practically unsinkable and stronger.

The design of screw boat is somewhat, I find, out of the question, owing to the condition solely due to depth of water, and if dredging were contemplated sufficient to allow this type of boat to proceed up river as far as an all-year-round service would pay, the screw boat offers certain advantages not possessed by the paddle and is certainly worthy of attention.

The advantages possessed by these designs (Plates XX. and XXI.) are:—

1. Boat, being subdivided into watertight compartments, is practically unsinkable.
2. Deck cabins made same height and width as electric trains and fitted exactly similar, possess same comfort.

3. Large plate-glass sided saloon boats travelling on river would be immensely popular.
4. Said plate-glass windows fitted to frames could be removed in hot summer weather.
5. Awnings on stanchions easily applied.
6. A complete fire boat, with stands for several hose-pipes. The necessary working flotilla, lying with banked fires at either end of the service, would be immediately ready in case of fire at night time.
7. Yarrow water-tube boilers being the easiest to generally work, repair, and especially to inspect by the Board of Trade every four months, who require to carefully inspect the inside of all tubes, should be adopted owing to the necessity of providing light boiler weight.
8. Anthracite coal, with the help of fan, can be easily worked, when the outgoing funnel gases will not cause the slightest inconvenience to passengers on board. With this fuel the chimney gases are exceptionally clear of dust, and smokeless.
9. Sliding gangway rails allow the crew to work at mooring boat unhampered when boat is crowded.
10. The after water-lines of hull are specially kept full, as the experience of designer finds this prevents materially the boat from listing heavily when passengers get over to one side for disembarking.
11. The spare boats of this type should be particularly popular for chartering to school, church and other institutions requiring such for a day on the river.
12. Special overhead gangway electric lights, to be switched on when boat approaches landing, enable passengers to clearly see when embarking or disembarking.
13. In winter time, canvas painted weather cloths laid around for full depth of railing would prevent all draught and keep decks comfortable.

GENERAL PARTICULARS FOR THAMES RIVER PASSENGER PADDLE STEAMER. See Plate XX.

GENERAL PARTICULARS.

Ship.

Length O.A., about 120 feet 9 inches. Breadth moulded, about 18 feet. Breadth O.A., about 34 feet. Depth moulded, about 5 feet 7 inches. Draught working order without passengers, 2 feet 9 inches. Registered tonnage, 0. Displacement at 2 feet 9 inches draught, about 85 tons. Suggested torpedo boat destroyer's scantlings. Teak decks, 2 inches. Sponsons faced with heavy elm and iron plate rubbers mounted on brackets and teak decked over. All iron work galvanized. Stout galvanized netting laid along outside rails; covered over in winter with weather cloths. Inside of ship to be bitumasticed throughout, no cement. Plates all slab hammered.

Saloons.

To be about 8 feet 6 inches wide and constructed on a light specification similar to the most up-to-date electrical railway cars, finished off internally with light polished oak and ash. Silver plated cabin fittings, including electric

fittings and holders. Transverse seats of rattan over spring seats and reversible backs. Electric lamps throughout, including navigation and overhead gangway lamps.

Steam heating.

Steam (Rowe's corrugated) pipe led round saloons and covered with perforated brass casings.

Lavatories.

Fitted up in first-class railway manner. Silver plated fittings, etc. All to lightest scantlings.

ENGINES.

Main Engines, 3 cylinder compound.

One H.P. about 18 inches diameter. Two L.P. about 25½ by 30 inches stroke. Light pattern cast steel frames, pistons, cylinder covers, valve covers, and chest doors. Ingot hollow steel shafts especially submitted for reduction in size. Working pressure, 150 pounds. Diameter of wheels over floats, 10 feet. Elm floats 6 feet by 1 foot 8 inches by 2¼ inches. Wheel work all to be of BBB iron, pins and bushes all covered with phosphor bronze. Centres of wheels cast steel. Revolutions, about 55. I.H.P., about 410. Yarrow water tube boiler. Grate surface, about 42 square feet. W.S., about 1,200.

Brass condensers.

Combined air and circulating pump, brass water ends.

Feed and fire pump.

Duplex pump capable of feeding boiler and supplying 6 fire land hose pipes.

Bilge pump.

Small duplex pump capable of pumping bilges and feeding boilers.

Electric light engine.

One De Laval capable of running thirty 20 candle-power lamps, and also driving 36-inch stokehold fan.

Steam steering engine.

Placed in forward compartment under deck.

Brass telegraph and hand-steering wheel.

All to lightest scantlings.

GENERAL PARTICULARS FOR DECK SHELTER TWIN SCREW RIVER BOAT. SEE PLATE XXI.

GENERAL PARTICULARS.

SHIP (HULL).

Length O.A., about 110 feet. Beam O.A , about 22 feet 8 inches. Beam moulded, about 16 feet 3 inches. Depth moulded, about 7 feet 4 inches. Draught working order without passengers, about 4 feet 6 inches. Register tonnage, about —. Displacement at 4 feet 6 inches, about 110 tons. Passengers on No. 5 certificate, 400. Sponson faced with heavy elm and iron plate rubbers mounted on brackets and decked over. All decks flush 2 inches teak. All iron work galvanized. Galvanized stout netting laid all round stanchions.

Steam Steering.

Engine placed in compartment under wheel house and actuated by small teak wheel and brass stand.

ENGINES.

Twin screw triple, about 8 inches—12 inches—20 inches by 15 stroke. Revolutions, about 240. I.H.P., about 350. Water pressure, about 160. Yarrow W.T. boiler. Grate surface, about 36 square feet. Heating surface, about 1,100 square feet. Bronze propellers, about 4 feet 8 inches diameter, with about 9 square feet surface each.

Fire engine.

Bilge donkey to be also suitable for a fire engine able to supply to landing hose-pipes. All hose-pipes, couplings, etc., to London Fire Brigade pattern.

Electric light engine.

De Laval capable of running thirty 16 candle-power lamps, also a 36-inch stokehold ventilating fan.

Engine room telegraph.

In duplex, port and starboard, with brass stand in bridge.

Condenser and auxiliary machinery.

Light sheet steel galvanized condenser; cooling surface about 750 square feet. Red metal $\frac{3}{4}$-inch tubes 6 feet 2 inches long. Tube plates, rolled bronze, $\frac{7}{8}$-inch thick. Checked ferrules 1 inch diameter, pitched fairly open for retapping.

Air and circular pump.

Horizontal type, brass water and air pumps complete.

Feed pumps.

Vertical pattern in duplicate with feed float tank.

SHELTERS, ETC.

To be about 8 feet 6 inches wide and constructed to the same specification as the most up-to-date electric railway cars. Finished off internally with light polished oak and ash. Silver plated electric fittings and holders. Transverse seats. Rattan spring seats with reversible backs. Electric lamps throughout including navigation and overhead gangway lamps.

Steam heating.

Steam (Rowe's corrugated) pipe led round saloons and covered over with perforated brass casings.

Lavatories.

Fitted up in first-class railway manner, silver plated fittings throughout.

By permission of the meeting, the SECRETARY read the following communication from Mr. Cherry:—

As an ex-member of your Association, and one who is actively engaged managing and working a river passenger service of some eighteen boats and twenty landings on the river Tyne, I should like the opportuntiy of briefly expressing my views on the Thames new passenger boat service; particularly so as my efforts to get in touch with the Council's authorities, with a view to trying to get them to adopt, or even consider, designs which I submitted, were of no avail.

I have made a considerable study of tidal river passenger services both in this country and on the Continent, and imagined that, with this experience, I might have been of some use to the London people, as, previous to their first London Steam Boat Bill, I had carefully gone into the matter and made plans; the Bill being thrown out, it checked the matter till a year later, when they got a similar Bill through Parliament successfully.

It was my idea that with slight dredging at London Bridge, Westminster Bridge and between Lambeth and Vauxhall Bridges, a suitable service of twin-screw corridor boats, drawing 4 feet 6 inches in working order, could easily and profitably work between Vauxhall Bridge and Greenwich, this service to be an all-year-round commercial one, expanding as might be necessary in summer by extra boats and always maintaining a fifteen minutes' service between Vauxhall and Greenwich, calling at the following landings:—Vauxhall Bridge, Lambeth Bridge, Westminster Bridge, Waterloo Bridge, Blackfriars Bridge, Southwark Bridge, London Bridge, Tower Bridge, Lime House, Cherry Gardens Bridge and Greenwich landings.

The above eleven stops in about 7¾ miles of straight, or about 9 miles zig-zag, could be easily worked in the hour, requiring but eight boats to operate this portion of the river.

For the summer upper reach traffic, my ideas were to purchase the best of the existing light draft paddle-boats, many of which were suitable for this purpose—and as the service had been abandoned, no doubt they could have been got cheaply—then with these boats carry on the holiday service from Vauxhall up to Hammersmith.

In a subsequent interview with the Council's engineer, I was informed that two sets of boats were out of the question, and that but one light draft universal type would be considered; so I then designed the paddle-boat, copy of which I lay before you, also that of the screw-boat. (See Plates XX. and XXI.)

My efforts, as I have previously said, were of no avail, and I venture to think, had this screw-boat been adopted in the way I have stated, a large amount of money would have been saved and a most notable type of boat instituted, that would have carried its 400 passengers or more, handsomely, comfortably and well.

The paddle-boat, too, would, instead of the present ones (a very doubtful compliment to the great men they are called after), have the practical advantage of being built and designed to better stand up to its work than the fleet of boats now operating.

I would ask you shipbuilding and engineering gentlemen, when next in London, to specially take a run on the river and observe the smashed-up condition of stems, paddle sponsons, crushed inside quarters of ship, want of stiffness, and general unfittedness of this large fleet of boats for the duty they are intended, and I think you will agree with me, a better fleet, already thirty years out of date, could not have been created to waste money and repel the travelling public than the London County Council new steamers.

Regarding Mr. Hogg's type of boat, we could do well with a few similar types on the Tyne for the ordinary line winter traffic, though experience has proved to us that boats carrying less than 250 passengers are not suitable.

The after body and arrangement of propellers would also require altering, as the ordinary type of screw-boat lines are useless when running before a strong tide in bringing up rapidly and going straight astern alongside awkwardly placed landings.

Mr. Alexander's remarks on the natural powers and most economical speeds for the existing London County Council boats are interesting, but when owners settle the speed the builders have but to comply. Personally, I am in favour of giving as much power as is practicable, all things, cost and especially wear and tear, being considered.

In both designs for the L.C.C. boats, I included Yarrow boilers, which, in a new fleet and under the conditions in which they would be worked, coaled and watered, would, in my opinion, have been particularly suitable, their only drawback being the three monthly Board of Trade inspections, but this I think would not prove such a serious obstacle as might be imagined; the adoption of such boilers would allow of less weight and more speed being obtained.

The discussion was closed.

The meeting then dissolved.

NORTH-EAST COAST INSTITUTION OF ENGINEERS AND SHIPBUILDERS.

TWENTY-SECOND SESSION, 1905-1906.

PROCEEDINGS.

THE CLOSING BUSINESS MEETING OF THE SESSION WAS HELD IN THE LECTURE HALL OF THE LITERARY AND PHILOSOPHICAL SOCIETY, WESTGATE ROAD, NEWCASTLE-UPON-TYNE, ON FRIDAY EVENING, MAY 18TH, 1906.

MR. J. R. FOTHERGILL, VICE-PRESIDENT, IN THE CHAIR.

The CHAIRMAN expressed regret that the President (Lord Armstrong) was unable to be present, being in France.

The SECRETARY read the minutes of the previous General Meeting held on Friday evening, April 20th, which were confirmed by the members present, and signed by the Chairman.

The CHAIRMAN appointed Mr. W. H. Dugdale and Mr. R. Saxton White to examine the voting papers for new members, and the following gentlemen were declared elected:—

MEMBERS.

Muir, John, Engineer, 7, Ilford Road, High West Jesmond, Newcastle-upon-Tyne.

Murray, George Harper, Ship Draughtsman, 37, Bon Accord Street, Aberdeen.

GRADUATES TO MEMBERS.

Bowmer, Matthew Noel, Engineer, 95, Algernon Road, Lewisham, London, S.E.

Robson, George, junr., Engineer, 9, Wellington Terrace, South Shields.

Wilson, Alfred Allan, Shipbuilder, 32, Ferncroft Avenue, South Hampstead, London, N.W.

ASSOCIATE.

Wisnom, Edward, Marine Superintendent, 44, Marlborough Road, Cardiff.

GRADUATE.

Goddard, James Alan, Engineer Apprentice, 7, Affleck Street, Gateshead-on-Tyne.

Mr. J. M. MONCRIEFF's reply to the discussion on his paper on "Commercial Dry Docks" was taken as read.

Mr. ARCHIBALD HOGG replied to the discussion on his paper on "The London County Council Passenger Steamers."

Presentation to the Secretary.

Closing business.

MR. J. M. MONCRIEFF'S REPLY TO THE DISCUSSION ON HIS PAPER ON "COMMERCIAL DRY DOCKS."

CONSETT CHAMBERS, PILGRIM STREET,
NEWCASTLE-UPON-TYNE, *May 8th*, 1906.

DEAR MR. DUCKITT,

I regret that I shall not be able to attend the forthcoming meeting of the Institution to reply personally to the discussion upon my paper on "Commercial Dry Docks," and I am therefore obliged to do so by letter.

I appear to have given the impression that I considered the dimensions given in the beginning of the paper to be the ideal dimensions for a dock upon the North-East Coast. I did not intend to give this impression, and in fact I merely said that a dock of the dimensions given would apparently accommodate every commercial vessel using the River Tyne prior to the end of the year 1904. Judging from the discussion, there does not seem to be any dispute as to the truth of my statement. The depth of 29 feet was given in order to avoid the possibility of the criticism being raised in the course of the discussion that a dock should be able to dock vessels at low water. I did not intend to convey to the Institution that it was my opinion that such a depth was indispensable in the modern commercial dock. Similarly, but in an opposite sense, I did not wish to be understood as claiming that the width of entrance should not be made more than 65 feet. At the time the paper was being read I actually had in view the construction of a new dock with an entrance 70 feet clear width and having 25 feet on the sill at high water. As regards the association of dry docks and shipyards, I do not need to say anything further than to refer the Institution to the remarks of two such able and experienced engineers as Mr. James and Mr. Dugdale. On this, as on many other points in connection with docks, it is apparent that there is room for difference of view. This divergence between competent authorities is also made manifest by Mr. James's statement that the lower altars at the foot of a dock wall are very inconvenient, and the directly opposite view taken by Mr. Box, who says they are very handy.

It is to be regretted that Mr. James did not give full particulars of the collapse of the gate which was due to the bursting of the heel socket.

Regarding the different types of anchorages, I am somewhat surprised that Mr. James prefers the sextant-shaped arrangement. I can assure him that as a matter of direct experience with both types there is no question as to its inferiority, even when anchored back as he describes.

I object to having sluices in the gates of a dock for two very good reasons, with one of which Mr. James certainly agrees, and that is that the sluices themselves and the necessary compensation for the weakening caused by the sluice openings add to the weight, which, as Mr. James very truly says, should be kept down as much as possible. The second reason is, however, a still more important one, and that is that the sluices in a gate cannot be repaired or replaced in case of damage without considerable difficulty. If the culverts are placed in the dock walls, of course presuming proper design and arrangement, there need be but little trouble in taking the sluice valve out and replacing it in a comparatively short space of time. The honeycombing of the walls by one or two culverts, if carried out on the lines indicated in my paper, *i.e.*, by means of large cast-iron pipes, is not objectionable. It is also to be noted that the water rushing from properly designed culverts in the side walls of a dock is directed against the ends of the blocks, while in the case of sluices in the gates it is difficult to avoid the rush of water being directed right broadside on to the blocks nearest to the sill. I quite agree with Mr. Sandeman and with Mr. Box in the suggestion that more than one filling culvert should be provided. I believe Mr. Box is in error in stating the width of the Tyne Pontoons dock entrance as being 80 feet; I know that it used to be 73 feet 4 inches at sill level. Mr. Box is also in error in saying that I propose a proportion of length to width of entrance equivalent to 8½ beams, and I have already pointed out that I merely said that a dock of certain proportions could have accommodated the vessels using the Tyne down to the end of 1904. I agree that the minimum width inside the dock is an important dimension, but manifestly it is impossible to deal with every detail in a paper on any subject. It is curious to note that within a few days of Mr. Box's expression of his hope that I would not be so rash as to suggest that another dock should be built on Tyneside, the announcement was publicly made that such a step was about to be taken, though not at my suggestion.

I agree that the title of my paper might have been "Commercial Graving Docks," but even this might not have been quite satisfactory. Is not a pontoon dock a floating graving dock? The term floating dock is sometimes applied to wet docks.

The remark that concrete work requires time to obtain strength is one which is very frequently made and is sometimes given an undue importance. The remark in itself is quite true, but it is not generally realized that concrete work attains a very large proportion of all the strength it ever will have in a comparatively short time after its completion.

As regards the use of ferro-concrete in the case of docks which demand such sections as are shewn in Sections 3 and 4, Plate IX., I have more than once given careful consideration to the question of the possibility of adopting ferro-concrete for dock work, but I have found that it would be, in bad ground where one would be most wishful to adopt it, very difficult if not impracticable to carry out. Besides this, one of the great advantages of ferro-concrete is the reduction of mass, and this in bad and water-bearing ground is precisely what is sometimes not desirable. There cannot be the slightest doubt, however, of the advantages of reinforcement of concrete by steel when it is done with a due regard to the special circumstances encountered, and I have myself the intention of utilizing the principle of reinforcement at an early date in dock work where the conditions and method of execution of the work are such as render it practicable.

As a general rule, I think it will be found that in bad ground the manner in which work has necessarily to be carried out and the conditions to be met are such that ferro-concrete cannot be adopted with economy unless the prices of materials and labour should happen to be considerably different from what they are at the present time.

The drainage culvert and the pump house should always be as near to the dock entrance as possible.

Since the discussion took place I have listened to a dock manager deploring that one of his docks had no gutters but only a slope from the dock head to the sill, which is actually the condition proposed by Mr. Box, who wishes to abandon gutters entirely. If the gutters fill with dirt, they should be cleaned out. If there were no gutters the dirt would lie upon the dock floor.

Mr. Dugdale, in his valuable discussion, gives an example of

rapid work with a pontoon dock which he claims is impracticable in any graving dock in this district. It will be of interest to compare his claim with the facts given by the late Mr. Alfred Giles (then Vice-President of the Institution of Civil Engineers) to the following effect:—"Speaking from his own experience with a pair of gates 80 feet wide, he had seen three vessels docked between daylight and dark. One vessel was taken in, repaired, and then taken out again; another vessel was taken in and repaired on the same blocks, and taken out again; and a third vessel was also treated in the same manner—all being done between daylight and darkness."*

I am aware of the instance referred to by Mr. Dudgale where it is safe to place buildings of the heaviest type close to the quay edge without any specially constructed quay, but the conditions are of a very exceptional character.

Mr. Saxton White's remarks as to caissons are very interesting, and I should like to point out that even when it is deemed desirable to retain the water in the dock, or at least some of the water, say to half tide level, for the purpose of insuring the safety of vessels when settling on the blocks, this can be done quite well, and is done regularly in some of the docks in South Wales, by having a pair of supplementary gates facing the reverse way to the principal gates and on the inner side of them. The extra cost of such a pair of supplementary gates could not nearly amount to anything like the cost of providing a caisson chamber.

In conclusion, I desire to thank the gentlemen who have taken part in the discussion for their kind appreciation; and in view of the remark of one speaker, I may say that it is practically impossible to be really generous in the giving of information in a single paper. In most cases the writer of a paper gets quite as much information from the discussion as he gives in his paper.

Yours faithfully,

J. MITCHELL MONCRIEFF.

The CHAIRMAN (Mr. J. R. Fothergill)—I think we shall very heartily pass a vote of thanks to Mr. Moncrieff for the able paper he has put before the Institution.

The proposition was carried by acclamation.

* *Min. Proc. I.C.E.*, vol. cxi., p. 92.

MR. ARCHIBALD HOGG'S REPLY TO THE DISCUSSION ON HIS PAPER ON "THE LONDON COUNTY COUNCIL PASSENGER STEAMERS."

Mr. Archibald Hogg replied to the discussion on his paper on "The London County Council Passenger Steamers." He said—I think the one prominent feature in the discussion on my paper might be said to indicate that the hulls of the London County Council steamers are not strong enough to meet the shocks received in the course of the traffic they are engaged in.

There are a few items in the discussion which perhaps it will be well to explain. It is possible that Mr. Middleton might find one object in writing this paper in the fact that it draws attention to the risk involved in designing steamers by any person who is not an experienced naval architect.

Mr. Alexander and Mr. Middleton are unhappy in their remarks on the question of speed in relation to length. I would like to explain that I never made any reference to speed in relation to length, and although the 90-feet steamer has a higher ratio of speed in relation to length than the London boat, it yet has a 30 per cent. better performance. I would refer these gentlemen to my paper, where I distinctly combined draft and length in speaking of the design and speed, which combines also the deadweight to be carried.

I do not agree with Mr. Alexander in thinking it would be more correct to say the displacement was large for the dimensions given and therefore the form was too full for the speed. How can the form be too full for a speed which it actually exceeded? If he means that the design was not one to give an economical result then he evidently does not disagree with the contention set forth in my paper.

Mr. Alexander's graphic method of finding the point where the displacement, speed and power coincide may be interesting, but it is no method of solving the main problem which baffles most architects, namely, the finding of the horsepowers for the varying dimensions and displacements, in order to construct the curves for the diagram.

In reference to the Admiralty constant, which Mr. Alexander is not prepared to accept, because he calculates the displacement must be 140 tons to agree with it, I find that in arriving at this conclusion he must have taken the designed speed along with the power obtained on the trial trip, and, of course, with these factors he is bound to arrive at a wrong result. The constant I gave is correct.

I do not understand why Mr. Middleton should think I questioned the wisdom of fitting electric light. All I did was to show what extra money was paid over and above the cost of the actual lighting plant; and this could easily have been avoided by a very slight change in the design.

Some of Mr. Middleton's remarks are made in the belief that the sizes of engines, etc., were not specified. Now his information on this point is not correct, both hull and machinery were specified. The fact that the Clyde builders added 6 inches to the breadth only shows that the breadth was specified, but this addition did not relieve them from the conditions of the contract. In speaking of the penalties on speed and revolutions, Mr. Middleton seems unaware that this is the same instance of excess in design to which I drew attention in my paper.

I have no doubt whatever that the London County Council exercised every care, only they, like many others, do not appreciate the possibilities in the design of such steamers; as it was, the London boats are really the outcome of the different proposals received from the builders, each aiming at the required original conditions, and except that the hulls are light for the power of machinery, and for some such points in design as have been referred to (doubtless of importance), they are otherwise as good as could be got on the conditions. Of course, with 4½ feet draft of water, the hulls could be made strong enough to resist the knocks mentioned by Mr. Cherry. There is a kind of inconsistency in Mr. Cherry's remarks regarding the smashed condition of the London boats' stems, etc., in view of the fact that he had himself proposed a paddle steamer, with a hull which could not be so strong (judging from the displacement) and fitted with 36 per cent. more power of machinery, a combination which would have faired worse in the handling. Mr. Middleton should note that it was this kind of wear and tear and the local working of the hull due to the large engines that I mentioned

in my paper and not the wear and tear of the engines themselves, as he imagines. The efficiency of these hulls can hardly be a matter of opinion, especially to those builders who know just what usage such will stand. The 90-feet steamer could not possibly be subjected to such damage, because the displacement is very much less and the power is more in keeping with the strength of the hull, the material for which is as strong as that in the present boats. It is largely because of this that I believe I am justified in concluding that this 90-feet steamer is the largest size that should have been utilized on the 2 feet 10 inches draft of water. Had more draft been available, then it might be a matter of opinion as to the best size of steamer, but the discussion on this head has not been such as to indicate definitely what is considered best, except that it points to a short-time service, and therefore I would conclude that it cannot pay to run boats capable of carrying a total of 500 passengers every ten or fifteen minutes.

In conclusion, I must thank Mr. Cherry and the members who have so kindly contributed to the discussion of my paper.

The Chairman (Mr. J. R. Fothergill)—Having heard Mr. Hogg's reply to the discussion on his paper, I must ask you to pass the usual vote of thanks to him for having put such an able paper before us.

The proposition was carried with acclamation.

PRESENTATION TO THE SECRETARY.

The CHAIRMAN (Mr. J. R. Fothergill) said—I have now to call upon Mr. Boyd to perform a very pleasant undertaking in regard to which not only he, but all the members present, will be gratified. Mr. Boyd, you all know, is the "father" of the Institution. I think it is the greatest compliment that could be paid our Secretary that Mr. Boyd should have taken, I will not say the trouble, but the pleasure, of coming here to-night to make this presentation to him. I will now ask Mr. Boyd to be kind enough to make this presentation to Mr. Duckitt.

Mr. WILLIAM BOYD said—I feel some difficulty in discharging the duty which has been imposed upon me this evening to my own satisfaction and to yours. The movement which has resulted in this gathering here to-night, and in the presentation which I am asked to make Mr. Duckitt, originated amongst a few of his friends in the autumn of last year, and there was some idea of presenting this testimonial to him at an earlier date, but other things came in the way, and it was then decided to defer it for a time. At that time I was asked to become the chairman of the committee upon which fell the duty of soliciting subscriptions, and, feeling that I could yield to no one in my knowledge and experience of Mr. Duckitt's services in the early days of the Institution, it afforded me very great pleasure to accede to that suggestion. Those of us who remember Mr. Duckitt's work some twenty-one years ago know very well the great amount of labour and trouble that he took in getting the affairs of the Institution into working order. It may be within the recollection of most of you that the first Secretary of this Institution was my friend Mr. W. G. Spence. He served us in the capacity of honorary secretary for practically the first twelve months after the foundation of the Institution, but in the summer of 1885—it sounds a long way back—Mr. Spence found his private work so great, and the work of the Institution growing so fast, that it was necessary to employ a permanent secretary. In July of that year Mr. Duckitt was appointed, and

came into office and took up the duties of secretary on the 1st August, 1885. So that, to all intents and purposes, he has served the Institution, with a very faithful service, for a period of twenty-one years. I will give you just a very few statistics showing the growth of the Institution since Mr. Duckitt entered upon his office. From the first, up to the present time, 163 papers have been read. If you refer to the balance sheet of May, 1885, you will find that there were 452 members of all classes, with an income of £437, and if you refer to a like document in July, 1905, that is, twenty years afterwards, which gives the last recorded figures, you will find that the number of members had increased to 1,031, and the income to £1,267. As a matter of fact, I believe the number of members is now about 1,130—probably more, if we include those who have come in to-night. But you will see that in these years the membership has increased about two and a half times, and the income about three times. That will indicate in a very few words the amount of work our friend has had to discharge, and the way it has increased during the years that are under review. In 1889, some five years after the commencement, the Graduate Section was formed, which again added to Mr. Duckitt's work. It was formed in that year when the late Mr. Francis C. Marshall was President, and his son, Mr. Frank T. Marshall, junior, was the first chairman of the graduates' section. It seems a very sad point to notice that those two gentlemen, father and son, have been called away since that year, and to both of them, as I said before on a previous occasion, particularly to Mr. F. C. Marshall, the father, the Institution in its early days owed a debt of gratitude that cannot be overestimated. I have shown these figures to give you a little idea of what Mr. Duckitt has done for us, but, after all is said and done, a statistical statement is only a feeble and inadequate representation of the services which he has rendered. There are services which cannot be measured in that way, and the man's personality, and the influence which it has had on the Institution, is of more value, and can be more highly esteemed, than can be represented by any number of figures. Of course, I must necessarily speak of my experience and knowledge of Mr. Duckitt's services some ten years ago rather than of recent days, but I think I shall be borne out in saying that Mr. Duckitt's attitude with regard to his Council deserves a word of

commendation of a strong and decided character. The secretary of such a council has a very difficult task to perform. To begin with, he has had to study the vagaries and the fads and fancies of eleven or twelve successive Presidents. That is enough in itself to stamp the man who has succeeded in going through such an ordeal as that and is still alive to tell the tale; but in addition to that, I think I may say that Mr. Duckitt's attitude towards the Council as a whole has uniformly been such as to arouse the respect and regard of all who have served upon that Council. Mr. Duckitt never hesitates to express his own views on any one of the many subjects that came up to be discussed at Council meetings, but, on the other hand, he never attempts to dominate his Council, and the consequence is that our friend has invariably advised the Council to the best of his ability, but has left that Council to come to its decision, and bear the responsibilities of the action they may have taken in any question that came before them. That is one of the reasons why I think Mr. Duckitt has been so successful, if I may say so, in handling the Council whose servant he has been. With regard to the general body of members of the Institution, I think that the support that has been given to this testimonial is an evidence that he has always been at their service—always ready to render assistance, and more particularly to help on junior members of the Institution in any way and at any time that lay in his power. It is very difficult to speak of a man, in his presence particularly, with sufficient warmth of feeling without seeming to overdo it, and so that the commendation should not become fulsome. Our friend is human like the rest of us, and no doubt he would be the first to admit that in the course of his career as Secretary he has made mistakes, but I always fall back on that proverb that the man "who never made mistakes never made anything." And for all that I am quite sure that I voice the feeling of the thousand members of this Institution when I say how much they feel indebted to Mr. Duckitt for his services in the office which he has filled for so long. I suppose it is a matter that cannot be very well disputed that Mr. Duckitt is twenty-one years older than he was when he first entered on office, but I do not think there are many signs of the passage of those years, and I am sure you will all join with me in hoping that Mr. Duckitt may be able to continue in the service of this Institution, if not for another twenty

years, at any rate for very many more, and that we may retain him in the service of this Institution, and that he may continue to assist in building up and regulating the affairs of, what I venture to call, this great Institution which he has served so long and so well. The testimonial which I have the pleasure to present on your behalf to Mr. Duckitt consists of this silver salver, bearing the following inscription: "Presented to Mr. John Duckitt, the 18th May, 1906, by Members, Associates, and Graduates of the North-East Coast Institution of Engineers and Shipbuilders, in recognition of his valuable services as Secretary during 21 years; and this salver is accompanied by a cheque for 200 guineas." Mr. Duckitt, I ask you to accept this little present, and I wish you long life and happiness to enjoy it.

The present was handed over to Mr. Duckitt amid cordial applause.

The CHAIRMAN said—Before Mr. Duckitt replies I think I may claim the privilege as one of your oldest Members of Council—for some eighteen continuous years you have done me the honour of electing and re-electing me a member of the Council—of expressing my entire agreement with all Mr. Boyd has said. I do not wish to repeat, but I wish to emphasize what Mr. Boyd has said. As a Member of the Council for the period I have mentioned I have seen Mr. Duckitt in varying phases. Not only have I frequently come in close contact with him in the Council meetings, but in the various Committee meetings, and I have always found his great desire was to carry out with honesty and simplicity of purpose the work entrusted to him. You can well understand there are worries associated with the office he holds, but he appears to stand it very well and wisely eschews gray hairs. He seems, indeed, to thrive upon it. I congratulate him, and I congratulate the Institution most sincerely on having made this presentation in recognition of the valuable services which Mr. Duckitt has rendered to the Institution.

Mr. JOHN DUCKITT, in replying, said—Mr. Boyd, Mr. Fothergill and Gentlemen—You can quite understand that in an experience extending over a term of 21 years one has had at times some difficulties to contend with, but I must confess, after

what has been said about me to-night, that the duty which now falls to my lot is one of the most difficult I have ever yet been called upon to perform.

I feel deeply touched by your kindness and generosity, but I fear it is impossible for me to find words wherewith to adequately express my feelings or to convey to you my sincere and grateful thanks for the tangible evidence you have given of your appreciation of my services.

It was at the instigation of your first Hon. Treasurer, the late Mr. Bryce G. Nichol, who took a keen interest in the formation and working of this Institution in its early days, that after a good deal of pursuasion from him I made application for the office of Secretary.

I was appointed. The Institution was then in its infancy. It was not a year old, and it had no home. I did what I could to foster it, but as Mr. Boyd has given you a summary of how it has developed I need not dilate further on that, only I wish you to understand that its success is not by any means chiefly due to my efforts.

The Institution has been ruled by a Council consisting of wise and business men, presided over by able Presidents, all of whom are men of note in this North-East Coast district, and the duty which devolved upon me was simply to carry out their instructions to the best of my ability. This I have striven to do, and the work has been both pleasant and agreeable owing to their indulgence and forbearance, and likewise to the courtesy which I have always received from the general body of the members of the Institution with whom I have come in contact.

I thank you most heartily for your handsome gift. This beautiful salver, whenever I look upon it, will remind me of your kindness and good wishes, and I receive it as a memento of 21 years of my past life in which I have made the acquaintance of a large number of warm and genial friends, many of whom I am thankful to say are still with us, but some have been called away.

Mr. Boyd, in his remarks, informed you that we had lost one of our Past Presidents. I was looking over the lists the other day, and I find that death has removed no fewer than twelve Vice-Presidents in the time, and also a considerable number of Councilmen. These were all hard workers in this Institution, and we greatly deplore their loss.

I can only in my humble way again return you my grateful thanks, and I trust that as long as I am permitted to continue your servant I may still merit your confidence and esteem.

One thing which has afforded me great pleasure is that your present has been handed over to me by Alderman Boyd, the first President and "father" of this Institution, and who, I hope, may long be spared to come amongst us. I know, perhaps, no one better, the work he has done for the Institution from its very foundation up to to-day. He has never lost sight of it, and he still takes a keen interest in all that we do. I am extremely obliged to you all.

Mr. Summers Hunter said—You elected a committee to carry out your wishes with regard to this testimonial, and I feel sure you will agree with me that that committee has carried out their delicate but happy work in a most appropriate manner. The secretary of the committee, Mr. C. Macdonald, is a man well known to us all for his busy life, but he has thrown such happy work into this testimonial that it has been consummated in a way that I am sure is acceptable to everybody, and in securing the first President of the Institution to make this presentation, there is no doubt that it has reflected great credit on themselves and added happiness to the occasion. I have great pleasure in proposing a vote of thanks to the committee, coupled with the name of Mr. Macdonald.

Mr. Alfred Harrison said—I have great pleasure in seconding the vote of thanks so ably proposed by Mr. Hunter. Mr. Macdonald himself is entitled to our best thanks, because the secretary as a rule does get the hardest of the work. I only hope that in the future our friend, Mr. Duckitt, will also have many years of pleasant recollection in looking at this presentation.

The motion was carried with applause.

Mr. Charles Macdonald—I have great pleasure in accepting your thanks.

CLOSING BUSINESS.

RE-ELECTION OF AUDITORS.

Mr. DAVID ANDREW said—I have much pleasure in proposing Messrs. R. W. and J. A. Sisson as auditors for the ensuing year.

Mr. C. A. BUSHELL—I have much pleasure in seconding that.

The motion was carried unanimously.

THE NEW PRESIDENT AND COUNCILLORS.

The CHAIRMAN made the following declaration as to the result of the ballot to fill the vacancies in the Council List:—

President—Mr. W. H. Dugdale.
Vice-Presidents—Messrs. D. Andrew, C. A. Bushell, and J. R. Fothergill.
Hon. Treasurer—Mr. G. E. Macarthy.
Members of Council—Messrs. J. M. Allan, E. C. Champness, D. Myles, J. L. Twaddell, and R. Saxton White.

Mr. W. H. Dugdale, Vice-President, having been elected President, Prof. R. L. Weighton was elected by the Council to fill his place in the Council List.

VOTE OF THANKS.

The CHAIRMAN (Mr. J. R. Fothergill) said—It has been our usual practice to propose at this last meeting of the Session a vote of thanks to the President, but, the President not being present, it will be well to defer it to our next meeting, when the new President will take the chair, and the vote of thanks will be passed to our present President.

The meeting assented to this course.

The CHAIRMAN said—I have now to ask you to pass a vote of thanks to the retiring members of the Council for their past services. I can say with all sincerity that members of the Council have frequently at some trouble and inconvenience attended our Council meetings. There has been a fair attendance throughout, and I think it is only right that this meeting should convey to those members of the Council its appreciation of their services during the period that they were members.

The proposition was carried by acclamation.

CLOSE OF THE SESSION.

The CHAIRMAN said—It is now my duty to declare the Session closed. I think you will admit that on the whole the Session has been a fairly successful one. It is true it has not been as successful as some sessions we have had. We have not had the number or perhaps the excellency of papers we have had in the past, and the Secretary desires me to say that he hopes you will all respond by producing papers in the ensuing Session. I do not think I have anything further to convey to you, so therefore I declare the Session closed.

The meeting then dissolved.

REPORT OF THE WORK OF THE CONSULTATIVE COMMITTEE APPOINTED TO CONFER WITH THE MARINE DEPARTMENT OF THE BOARD OF TRADE, FOR THE YEAR ENDED 5TH MARCH 1906.

The Consultative Committee beg to report upon the work which has engaged their attention for the year from 5th March, 1905 (being the date of their last report), to 5th March, 1906.

1.—Subjects which had already been under notice of the Committee were:—

Water Tube Boilers;
Reduction of Weight of Stays in Boilers—Reduction of Scantlings;
Testing of Steam Pipes;
Furnishing Midship Sections and Plans of Pumping Arrangements to Board of Trade;
Engineer Apprentices;
Alteration by Board of Trade of previous practice as to Surveys without notice of alteration being given by the Board;
Fitting of Freeing Ports to Shelter Deck Vessels;
Exemption of Poop Tonnage—Requirement as to Tonnage Opening;
Written Communications to be given by the Board of Trade on Important Subjects instead of mere verbal statements by Local Surveyors;
Uniformity of Practice among the Surveyors—Sanitary Arrangements on Board Steam Trawlers;
Incompleted Declaration of Surveyor at port of building not to be called in question at port to which vessel may be sent—Fitting of Covers on Steering Gear Rods and Chains;

Water Tube Boilers.—The subject of Water Tube Boilers continued to occupy the attention of the Committee, and a representation was made to the Board of Trade as to whether, in the light of more recent experience, and the report of the

on another matter referred to below, mentioned incidentally that he confirmed the principle agreed to by the late Sir Courtenay Boyle, and stated that the Surveyor at the port where the certificate was granted would not be allowed to object where the alteration was a matter of caprice or even of mere difference of opinion, but that, of course, where errors or omissions occurred in the incompleted declaration, the Surveyor at the port of granting of the completed certificate was bound to see that these errors and omissions were rectified.

II.—Subjects, dealt with during the year, which had not previously been before the Committee were:—

Fitting of Double Horn Cleats on Boat Davits;
Cast Iron Frames for Side Lights;
Certificates of approval of material;
Provisional approval of arrangements when plans shewing such arrangements have been demanded by Board of Trade;
Fitting of Rails round Poop Hatches;
Amendment of Clause 20 of the Instructions as to the Survey of Passenger Accommodation—Deputation to Board of Trade.

Fitting of Double Horn Cleats on Boat Davits.—A firm communicated to the Committee that a demand had been made by a local surveyor for the fitting of double horn cleats on the boat davits of a steamer recently built by them and also on the davits of a vessel which they had repaired. The opinions of various builders were obtained, from which it appeared that the practice was not to fit double horn cleats, and this Committee expressed the opinion that the double horn cleats demanded by the Board of Trade Surveyor were quite unusual and unnecessary.

Cast-iron Frames for Side Lights.—The Committee discussed this matter with the Board of Trade, with the result that that department has agreed that side lights having cast-iron frames may now be fitted to poops, forecastles, and deck-houses, wherein there is no hatch or opening through the main deck whereby water could enter in case of a side light fracturing and water entering through it.

tions to the engineers and boilermakers of the Kingdom for their opinion. A synopsis and an analysis of the replies has been prepared by Mr. A. E. Seaton, Chairman of the Committee, and is engaging the Committee at present.

Testing of Steam Pipes.—The correspondence between the Board of Trade and this Committee mentioned in last report was continued, and the Committee were supplied with a copy of the general minutes issued to their Surveyors by the Board of Trade on the subject of the testing of steam pipes. Copies of the correspondence and of the general minute referred to were sent to the contributing associations and firms for information, and the Committee endeavoured to obtain from the Board of Trade an undertaking that a three months' notice should be given of alterations. The Board of Trade, however, while noting the request of the Committee for an early intimation of any similar minutes which the department may issue, state that they are unable to assent to any definite rule or pledge being laid down in the matter, which might have the effect of limiting their discretion to issue any rule or regulation, if, and when, they consider it necessary to do so in the interests of public service.

Furnishing Midship Sections and Plans of Pumping arrangements to the Board of Trade.—The result of the inquiry by this Committee from shipbuilders, as to what the practice is in the matter of giving Surveyors copies of the plans of pumping arrangements, was published by the circulation of a notice among the Secretaries of the Associations interested, stating—

(*a*) That it is not a general custom to provide Board of Trade Surveyors with plans of the pumping arrangements of vessels which are built to class with one of the recognized registries, but, that it is not uncommon for shipbuilders to permit the Surveyor to examine the plans in their office; and,

(*b*) When a ship is not classed, such plans are usually furnished to the Surveyor.

The Committee also communicated with the Board of Trade suggesting that a single Downton pump in the machinery space is really safer than the arrangement of a set of single pumps,

but the Board of Trade have replied that rotary pumps may be substituted for the ordinary deck pumps to each compartment, provided that at least two rotary pumps are fitted, and all cocks and valves, connected with the hold, and other suction pipes to which the pumps are connected, are fitted with rods having deck plates properly marked, by which they could be controlled from the upper deck, or at least from a point well above the deep load line.

Engineer Apprentices.—The Engineering Apprentices Sub-Committee of the Consultative Committee has carefully, under the convenership of Mr. D. B. Morison, considered the question of the suggested alteration in the rules affecting the granting of certificates to engineer candidates. The Sub-Committee reported to the General Committee, who wrote to the Board of Trade, submitting that before an Engineer is eligible as a candidate for a Board of Trade Certificate the following conditions should be fulfilled:—

1. That Apprenticeship should be for a period of not less than five years.
2. That of these five years not less than three years shall be spent in the machine, fitting, or erecting departments of works engaged in the construction or repairing of machinery, and not more than one year may be spent in a drawing office, and not more than one year may be spent in a technical school or college approved by the Board of Trade.
3. That at least one year, either during apprenticeship, or subsequent to it, must be spent in the fitting, or erection shops of a marine engine works, or in fitting of machinery on board ships.

Alterations by Board of Trade of previous practice as to surveys without notice of alteration being given by the Board.—Complaints of the action of the Board of Trade, in issuing instructions to their Surveyors as to the measurement of ships, etc., which make alterations on previous practice, without giving due notice of the alterations to the ship builders and engineers of the country, have repeatedly been made to the Committee.

Firms have written complaining that exemption from tonnage measurement has been refused to spaces, because of alterations in Board of Trade rules, made without any intimation. In one case a firm was refused tonnage allowance because, in accordance with their practice for some years, the firm had left openings in front of the poops and at after end of bridge, 2 feet 10½ inches clear. The Board of Trade refused to pass the boat unless the openings were made 36 inches clear, on account of a new rule which came into force in 1901. The firm in question had received no intimation of this regulation nor had this Committee any knowledge that such a rule had been made. Enquiries from various firms elicited the information that not one had any notice as to the alteration. The Committee approached the Board of Trade drawing attention to the legitimate grievance of the firm in question, and suggesting that in future the Board of Trade should notify all alterations to shipbuilders at the same time as they issue new regulations to their Surveyors. The Board of Trade in their answer dated 31st July, 1905, stated—

> "The Board desires me to explain that for years past it has been the practice of the Surveyors of this department to intimate to the shipbuilders in their district, any decision or rule affecting details of this character in the measurement of ships, and there is no reason to doubt that Messrs. . . . . were duly informed of this particular requirement at the time it was decided upon. I am, however, to add that the Board have given instructions for a more formal notification to be made to shipbuilders of details of this nature than has hitherto been the case."

On 21st August, 1905, the Board of Trade, in response to a request made by the Committee when acknowledging receipt of the above letter of 31st July, 1905, stated that the request of the Committee that they may be informed of changes made in the Board's instructions to their officers had been noted.

On 16th October, 1905, another case was brought before the Committee, regarding the exemption of poop tonnage. The Board of Trade Surveyor at Glasgow had refused to exempt

but the Board of Trade have replied that rotary pumps may be substituted for the ordinary deck pumps to each compartment, provided that at least two rotary pumps are fitted, and all cocks and valves, connected with the hold, and other suction pipes to which the pumps are connected, are fitted with rods having deck plates properly marked, by which they could be controlled from the upper deck, or at least from a point well above the deep load line.

Engineer Apprentices.—The Engineering Apprentices Sub-Committee of the Consultative Committee has carefully, under the convenership of Mr. D. B. Morison, considered the question of the suggested alteration in the rules affecting the granting of certificates to engineer candidates. The Sub-Committee reported to the General Committee, who wrote to the Board of Trade, submitting that before an Engineer is eligible as a candidate for a Board of Trade Certificate the following conditions should be fulfilled:—

1. That Apprenticeship should be for a period of not less than five years.
2. That of these five years not less than three years shall be spent in the machine, fitting, or erecting departments of works engaged in the construction or repairing of machinery, and not more than one year may be spent in a drawing office, and not more than one year may be spent in a technical school or college approved by the Board of Trade.
3. That at least one year, either during apprenticeship, or subsequent to it, must be spent in the fitting, or erection shops of a marine engine works, or in fitting of machinery on board ships.

Alterations by Board of Trade of previous practice as to surveys without notice of alteration being given by the Board.—Complaints of the action of the Board of Trade, in issuing instructions to their Surveyors as to the measurement of ships, etc., which make alterations on previous practice, without giving due notice of the alterations to the ship builders and engineers of the country, have repeatedly been made to the Committee.

Firms have written complaining that exemption from tonnage measurement has been refused to spaces, because of alterations in Board of Trade rules, made without any intimation. In one case a firm was refused tonnage allowance because, in accordance with their practice for some years, the firm had left openings in front of the poops and at after end of bridge, 2 feet 10½ inches clear. The Board of Trade refused to pass the boat unless the openings were made 36 inches clear, on account of a new rule which came into force in 1901. The firm in question had received no intimation of this regulation nor had this Committee any knowledge that such a rule had been made. Enquiries from various firms elicited the information that not one had any notice as to the alteration. The Committee approached the Board of Trade drawing attention to the legitimate grievance of the firm in question, and suggesting that in future the Board of Trade should notify all alterations to shipbuilders at the same time as they issue new regulations to their Surveyors. The Board of Trade in their answer dated 31st July, 1905, stated—

> "The Board desires me to explain that for years past it has been the practice of the Surveyors of this department to intimate to the shipbuilders in their district, any decision or rule affecting details of this character in the measurement of ships, and there is no reason to doubt that Messrs. . . . . were duly informed of this particular requirement at the time it was decided upon. I am, however, to add that the Board have given instructions for a more formal notification to be made to shipbuilders of details of this nature than has hitherto been the case."

On 21st August, 1905, the Board of Trade, in response to a request made by the Committee when acknowledging receipt of the above letter of 31st July, 1905, stated that the request of the Committee that they may be informed of changes made in the Board's instructions to their officers had been noted.

On 16th October, 1905, another case was brought before the Committee, regarding the exemption of poop tonnage. The Board of Trade Surveyor at Glasgow had refused to exempt

passengers on board the draught of water would be about 2 feet 11½ inches.

The given requirement of 500 passengers fixes the deck area independent of any question of draught of water, and thus the decisive factor in this design is the question of economic propulsion. The constant obtained by the Admiralty formula, $D^{\frac{2}{3}} \times \frac{V^3}{P}$ is a sure guide to the economy of the design, and in these paddle steamers it works out at a little over 130. Now this is not an economical constant for a steamer which has to do such work, and at the early stages in the proposal this fact should have received consideration, with a view to modifying the design of steamers to carry fewer passengers at a lesser speed.

The type of steamer required for work in the Thames is not really what is usually understood by the term "River Passenger Steamers." Consequently, a vessel having a capacity similar to that of a street car, or rather larger, with a service at frequent intervals between the landings, would perhaps be more likely to meet the requirements of the traffic. Such a steamer is illustrated on Plate XVIII. The dimensions are: length, 90 feet between perpendiculars; beam, 13 feet; depth, 5 feet; and the vessel has one deck only for passengers except in way of the saloon, which is sunk into the hull with a raised roof upon which passengers may sit. Twin screw propellers are used instead of paddles, thus saving the weight of paddle boxes, sponsons, etc. This steamer would carry 150 passengers at a speed of 12 miles per hour with about 75 I.H.P. on a draught of water of 2 feet 10 inches, while the deck area provided allows for a maximum of about 200 passengers. It is probable that, while employing the same number of boats, they would carry, on an average, as many passengers as the present boats do. They would cost less and would be much more economical in the consumption of coal, etc. The saloon could be lightly panelled and the seats upholstered with cushions, while some of the steamers could be fitted with refreshment bars. Thirty of these steamers would cost about £95,000 less than the present boats, the yearly coal bill would be about £17,500 less, the other expenses, including insurance, would be correspondingly reduced and the cost of upkeep repairs would be greatly curtailed. If 30 steamers were not sufficient to meet the traffic at certain times more vessels could

be added. The fleet would be much more manageable with a larger number of smaller boats, and could be increased or curtailed as desired, which it cannot be at present without seriously impairing the service. These ninety-feet boats are suggested as the largest size that should have been utilised, but it is probable that much better results might be expected from smaller vessels.

I do not wish to imply that any of these smaller steamers would have been entirely successful.

DISCUSSION.

Mr. F. H. ALEXANDER said—The paper just read ought to be of interest because of its bearing upon the trials of the overburdened ratepayer. It is said that in a multitude of counsellors there is wisdom; but it depends upon the kind of counsellors; and Mr. Hogg seems to suggest that if shipbuilders had been the counsellors in the case before us, the London ratepayers might have had reason to be better satisfied.

Certain of the technical points in the paper merit remark. Mr. Hogg says that the steamers were designed with too great a speed on the specified length and draught of water. Now, so far as length is concerned, there are many vessels of somewhat similar type whose speeds are higher in relation to the square root of their length; such, for instance, as the passenger steamers on the Firth of Clyde owned by the railway companies; and the draft of some of these vessels is also relatively as light as that of the London steamers, in so far as its relations to length and to speed are concerned. Perhaps it would be more correct to say that their displacement was large for the dimensions given, and that the form was too full for the speed in consequence.

In a case of this sort, the problem for the naval architect may be put as follows: Given a maximum length and draught, and a minimum beam and speed (the minimum beam being required for deck space on the given length), how may we find the least displacement and the least power with which the speed can be obtained? I venture to suggest a graphic method of solution which I will now explain. The diagram (Plate XIX.) shows a curve, A, whose abscissae are displacements, and whose ordinates are indicated horsepowers for the given speed on the given length, beam, and draft. Curve B is similar, but is that for a

from the gross tonnage the poop of a vessel under construction on the ground that there was only one opening in front of the poops and no freeing ports.

The Board of Trade asserted in reply that the action of the Surveyor was ruled by instructions issued to Surveyors in 1901, and that, when the Board's letter of 31st July, 1905, was sent to the Committee, the preparation of a circular embodying recent decisions regarding the measurement of spaces above the upper decks of vessels was immediately commenced, and had been issued and widely circulated by 27th September, 1905, and maintained that the circulation amongst those concerned of copies of such an instruction to Surveyors as this one, on the measurement of spaces above the upper decks, appears to provide shipbuilders and others with all the information they require as to the details of the Board's general practice.

On 11th January, 1906, a further case, with regard to exemption of the poop deck from tonnage, was brought to the notice of the Committee by the Clyde Shipbuilders Association. From this case it appears, that, in November, 1905, one of the members of that Association was informed that, unless the tonnage opening is exactly in centre of the vessel, or two openings of equal size are provided, one on either side, the poop space will not be exempted from tonnage unless the space has been further opened to the weather and sea by cutting freeing ports and scuppers therein. The Committee is making enquiries as to the practice in the districts as to this.

The question of fitting freeing ports in the shelter 'tween decks of vessels has been raised by another firm. In their last report this Committee stated (page 3) that the matter had been settled between the Board of Trade and builders of a vessel then referred to, which was fitted with Collinson's scuppers, and that the Board of Trade had waived the demand when informed that the owners objected to the fitting of freeing ports. On two occasions, since the Committee obtained this information, queries were addressed to them regarding the practice, and on each occasion the Committee stated what had come to their knowledge. In the present case, however, the Committee were asked to approach the Board of Trade. This was done, and the cases above referred to were cited. The Board of Trade, however, has replied that, since 1903, when the Board of Trade issued a

rule regarding the fitting of freeing ports, no vessel has been exempted from its operation, and that, before spaces of this nature can be exempted from tonnage measurement, they must bs sufficiently open to weather and sea as not to be available for the carriage of cargo or stores, and unless such openings as freeing ports are fitted the officers of the Board of Trade are unable to consider such spaces eligible for exemption.

The Committee regret that the Board of Trade should not give such notice of alteration as has been contended for, and are pressing the matter further with the Board. In addition they are endeavouring to get the Board to alter the mode of the Surveyor verbally intimating to a single official of a firm alterations which have come into force, and to agree to give formal intimation in writing to shipbuilders and engineers of prospective alterations.

Uniformity of Practice among Surveyors, and understanding that the incompleted declaration of Surveyor at port of building is not to be called in question at port to which the vessel may be sent.—The Committee, with regard to a question of difference of practice followed by the Surveyors on the east and on the west coasts, are in communication with the Board of Trade as to a difference in the requirements of the Surveyors in these districts respecting sanitary arrangements and position of lamp room on board steam trawlers. As regards the incompleted declaration of a Surveyor, this question, after having been settled in 1896, when the Committee had an interview with the late Sir Courtenay Boyle, who was then Permanent Secretary to the Board of Trade, was revived by the action of a Surveyor at London, who refused to grant a passenger certificate to a vessel which had been completed in every respect to the satisfaction of the Surveyor at Glasgow, and all that was wanted previous to the granting of the certificate was the certificate of the master, engineer, etc., and the compass adjuster's certificate, unless the steering-gear, rods, and chains were boxed in. As a sister ship, built by other builders, had been granted her certificate without such fittings the Committee drew the attention of the Board of Trade to the promise of Sir Courtenay Boyle in 1897. Mr. Howell, Assistant Secretary to the Board of Trade, in the course of an interview which a deputation of the Committee had with him,

on another matter referred to below, mentioned incidentally that he confirmed the principle agreed to by the late Sir Courtenay Boyle, and stated that the Surveyor at the port where the certificate was granted would not be allowed to object where the alteration was a matter of caprice or even of mere difference of opinion, but that, of course, where errors or omissions occurred in the incompleted declaration, the Surveyor at the port of granting of the completed certificate was bound to see that these errors and omissions were rectified.

II.—Subjects, dealt with during the year, which had not previously been before the Committee were:—

Fitting of Double Horn Cleats on Boat Davits;
Cast Iron Frames for Side Lights;
Certificates of approval of material;
Provisional approval of arrangements when plans shewing such arrangements have been demanded by Board of Trade;
Fitting of Rails round Poop Hatches;
Amendment of Clause 20 of the Instructions as to the Survey of Passenger Accommodation—Deputation to Board of Trade.

Fitting of Double Horn Cleats on Boat Davits.—A firm communicated to the Committee that a demand had been made by a local surveyor for the fitting of double horn cleats on the boat davits of a steamer recently built by them and also on the davits of a vessel which they had repaired. The opinions of various builders were obtained, from which it appeared that the practice was not to fit double horn cleats, and this Committee expressed the opinion that the double horn cleats demanded by the Board of Trade Surveyor were quite unusual and unnecessary.

Cast-iron Frames for Side Lights.—The Committee discussed this matter with the Board of Trade, with the result that that department has agreed that side lights having cast-iron frames may now be fitted to poops, forecastles, and deck-houses, wherein there is no hatch or opening through the main deck whereby water could enter in case of a side light fracturing and water entering through it.

Certificates of approval of material, etc.—The Committee have suggested to the Board of Trade that certificates should be granted by the Surveyors, when they had inspected materials, machinery, etc., of their approval thereof, and a correspondence is still being carried on with the Board of Trade on the subject.

Provisional approval of plans shewing arrangements of grain feeders, hatches, etc., for grain carrying vessels.—The question of the approval of plans shewing arrangements of grain feeders, hatches, etc., for grain carrying vessels was brought before the Committee by the Tyne Shipbuilders Association, and representations were made by the Committee to the Board of Trade, that, when the Board require and are supplied with plans, they should state their approval or otherwise of the arrangements shewn, as is done by the classification societies, instead of waiting till the completion of the vessel; a course which causes much needless anxiety to the shipbuilders, and if alterations are required, great and avoidable expense. After correspondence on the subject, this Committee suggested to the Board of Trade, that in such cases, and in all cases where plans have been submitted, but the carrying of them out must be completed before a certificate can be granted, a certificate in the terms following might be granted:—

> That the proposals as embodied in the plans submitted and marked and further explained in [*letter of specification*] dated are approved by the Board of Trade for the purpose [*here state the purpose*], and if the ship is constructed and fitted out in accordance with these plans, letters, or specifications, and is otherwise as required by the Merchant Shipping Act, 1894, for this purpose, a certificate for will be granted."

The suggestion is being carefully considered by the Board of Trade; but meantime the Committee desire to draw attention to a paragraph contained in another letter from the Board of Trade, on the subject of alterations of rules without notice, dated 11th November 1905, namely:—

> "The Board desires me to say that they are at all times ready to consider any plans which shipbuilders may

wish to submit, and as the general practice of the department is known to those interested, it would save considerable trouble and inconvenience if shipbuilders and others would submit, at early stages of their work, any proposed departures from that practice, instead of leaving it until the work is far advanced.

Fitting of Rails round Poop Hatches.—The Committee, in response to a request, expressed an opinion that the practice generally is, to fit stanchions and rails or chains to the hatchways on decks where passengers may and do frequent unless the coamings are high, and that the Board of Trade appear to have a right to demand that this should be done.

Alteration of Rule 20 of the Instructions as to the Survey of Passenger Accommodation.—On 30th November last the Sub-Committee on Tonnage of the Consultative Committee, at the request of the Board of Trade, had an interview, as a deputation from the Committee, with Mr. Howell, Assistant Secretary, and the officers of the Board of Trade. The proposed alteration was fully considered, and after discussion, a letter was written to the Board of Trade stating that the Committee, having regard to the assurances given by Mr. Howell that all other authorities interested in the question had signified their approval or non-objection to the proposal of the Board of Trade, had no objections to the proposed amendment of Clause 20 of the Instructions as to the Survey of Passenger Accommodation, but suggesting that at some future time the allowance of boat accommodation should be reconsidered with the view of making it more consistent throughout.

MEMOIRS.

MR. HENRY W. BROCK.

(COMMUNICATED BY MR. JOHN IRVING.)

Mr. HENRY W. BROCK was the elder son of Mr. Walter Brock, of Levenford, chief of the firms of Messrs. Wm. Denny & Bros., shipbuilders, and Messrs. Denny & Company, engineers, Dumbarton. He was born in Glasgow on 15th March, 1869, and removed with the family to Dumbarton when his father joined the late Dr. Denny in the management of the local businesses thirty-five years ago. He received his schooling at the Burgh Academy, Dumbarton, and Fettes College, Edinburgh, and early showed that he had inherited no mean talent for engineering, for which profession he was designed. Following the "thorough" method, adopted with so conspicuous success in the training of the younger men who are taking their part in guiding the shipbuilding and engineering industry of Dumbarton to-day, and have had no small share in making the name of Denny synonymous with all that is progressive and successful in these great professions, in 1886 young Henry Brock started his apprenticeship with Messrs. Denny & Co. in the ordinary way, going through the usual shop course like other apprentices, and conforming to hours and rules just as they do. He then went to France to the works of the Forges et Chantiers, Havre, where he studied languages and added to his technical knowledge. From there he went to the east coast of England, where he served in the Central Marine Engineering Works, gaining further practical experience. Thirteen years ago he returned to Dumbarton, and was assumed partner in the Engine Works. Four years later he also became a partner in the shipyard firm. Since 1892, Mr. Henry, the name by which he became lovingly known, threw himself with professional enthusiasm and zeal into the administration of the former concern, proving himself of great assistance to his father and the other managing partners. He was charged with the oversight of the designing and technical sides of the business, and, having undoubted mechanical talent, promised to become, if, indeed, he had not already become, one of the first engineers of the Clyde. Cut off, even as he has been,

in the midst of all its activities, he had already achieved a reputation which might be envied by many men of more mature years, and that not confined to the community which now mourns his loss, but extending into the wider arena of engineering science. A ruling principle guiding his professional career was a keen appreciation of the importance of small things. With infinite patience and protracted labour, the late Mr. Brock keenly investigated the minutiæ of his profession, and no habit of mind could be more valuable in the study of turbine propulsion with which his name will ever be honourably associated. Of modest and unassuming disposition, he always shrank from public notice of any kind, yet, if spared, many of the honours which come naturally to leaders in engineering were bound to be his, a recent election to the membership of the Institute of Civil Engineers, a much-prized compliment, being but one.

When the Hon. Charles Parsons began to demonstrate the possibilities of his steam turbine as a marine motor, Mr. Henry Brock was among the first attracted by the adaptability of the new engine—an engine fast revolutionising steam-ship propulsion. He was among the few on board the Admiralty's "Viper," when with turbine engines she steamed at the great speed of 37 knots an hour, and several months thereafter, joined in the syndicate which commissioned Messrs. Denny & Bros. to build, and Messrs. Parsons to engine, the "King Edward," the Clyde passenger vessel which is the pioneer commercial turbine steamer. A couple of years later, Messrs. Denny & Co. secured turbine-building rights from the Parsons Co., and under Mr. Henry Brock's direction built and fitted to a ship the first set of turbines constructed outside the inventor's own establishment. The ship in question is the "Lunka," belonging to the British India Steam Navigation Company, and now on service in the Persian Gulf. Other successful steamers followed, including the first turbine ships on the English and Irish Channels, and in Australian waters, thus linking the names of Dumbarton and her captains of industry with that of Mr. Parsons in the introduction of the turbine to commercial shipping, and pioneering the way for the great development which recent years have witnessed in the application of the turbine to marine propulsion. In this connection the deceased was specially honoured. He was selected one of the experts who sat on the Cunard Turbine Com-

mission. It will be remembered that the Cunard Co. agreed with the Government to build two leviathan Atlantic liners, having a service speed of 25 knots; two boats, in fact, which would be the fastest in the world, and regain for this country the title of "ruler of the seas," the blue ribbon having for the nonce gone to Germany. Whether these two big ships should have turbine or reciprocating machinery was the technical problem set the Cunard Commission, and their verdict it will be remembered, rested with the former. In the deliberation and practical work of the Commission the late Mr. Brock took a large share. He was responsible for the carrying out of exhaustive experiments on the "Arundel" and "Brighton," two Dumbarton-built sister ships engaged in the English Channel service, and fitted with reciprocating and turbine machinery respectively. The carefully-compiled results of this investigation had conclusive effect on the Commission's decision. But, unfortunately, while Mr. Brock had the satisfaction of seeing the Cunard Co. adopt that decision, he has not been spared to see the big liners accomplish their task. Among the technical societies for membership of which the deceased qualified himself, are the Institution of Civil Engineers, the Institution of Naval Architects, the Institution of Shipbuilders and Engineers in Scotland, the North-East Coast Institution of Engineers and Shipbuilders, and the Institution of Marine Engineers.

Mr. Brock was confined to the house in the early part of 1906, but shortly before his death thought himself sufficiently recovered to return to business. A relapse, however, supervened, and he was laid aside with influenza, which caught him with a system run down, and developed brain fever, to which he succumbed on the 10th of February, 1906, in his 37th year.

MR. ARTHUR COOTE.

Mr. Arthur Coote, who was born on the 23rd of March, 1841, and was the eldest surviving son of the late Mr. Thomas Coote of Fenstanton, Huntingdonshire, served his five years' apprenticeship as an engineer with the eminent firm of Messrs. Denny & Co., of Dumbarton. On its completion, he came to the River Tyne and in the year 1863 joined the firm of Messrs. Andrew Leslie & Co., as junior partner. Mr. Coote at first

resided at Hebburn, and by his kind-hearted and engaging disposition, soon made himself popular among the workmen who served under him.

In 1867 he married Miss Janet Mackintosh, Mr. Andrew Leslie's adopted daughter. He then took up his residence at Tynemouth and afterwards at the Minories, Jesmond, Newcastle-upon-Tyne.

The business at Hebburn proved very successful and continued to increase. In 1884, Mr. Andrew Leslie retired and the business was amalgamated with that of Messrs. R. and W. Hawthorn, under the title of Messrs. Hawthorn, Leslie & Co., Ltd., in the formation of which Mr. Coote was the principal mover and became managing director of the Hebburn shipyard, which position he held until a few years ago, but still continued a director of the Company up to the time of the railway accident which caused his lamentable death.

Mr. Coote was chairman of the Tyne Shipbuilding Employers' Association for a period of nine years, which position he filled with great satisfaction to his colleagues. He was for several years a member of the old Hebburn Local Government Board and a magistrate of thirty years' standing for the county of Durham. Being a member of the Company of Shipwrights, London, in 1898, he was made a freeman of the City of London. He was a member of the Institution of Naval Architects, also the Institution of Mechanical Engineers. He joined the North-East Coast Institution at its formation in 1884 and for eight years held the position of vice-president.

Mr. Coote had been visiting his eldest daughter at Aberdeen, and left that city at 8 p.m. on Friday, June 22nd, 1906, for Glasgow, to attend the launch of H.M.S. "Agamemnon." Near Baillieston, part of the train left the rails and the coupé carriage which he occupied came into collision with the stonework of the bridge at the very corner where he was sitting, which caused his instantaneous death. Mr. Coote was 65 years of age. Some few months prior to this, his wife died and likewise his father.

Mr. and Mrs. Coote both took a keen interest in the social and domestic affairs of the residents of Hebburn, to whom they had endeared themselves by their kindness and generosity, and, indeed, they were highly esteemed by all with whom they came in contact.

MR. JAMES B. EDMISTON.

Mr. JAMES B. EDMISTON received his early training in Scotland, serving his apprenticeship with Messrs. M'Nabb and Co., of Greenock. He then went to India in the service of the P. and O. Company, and while there transferred his services to the British India Company. He afterwards returned home, and became engineering superintendent for Mr. Joseph Hoult. In January, 1882, he joined the firm of Messrs. Hamilton, Fraser, and Co., as superintendent engineer, and remained in the same employ until his decease, a period of over twenty-four years. He invented the Edmiston patent feed-water filter, and in 1892 he read before the North-East Coast Institution of Engineers and Shipbuilders a paper on "The Rapid Filtration of Feed Water," in which he laid before the Institution data of what had been accomplished up to that date in the mechanical filtration of feed-water. He was also associated with the late Mr. Mudd, of the Central Engine Works, West Hartlepool, in the introduction of the quadruple-expansion engine operated on the five-crank principle.

He was a member of the Institution of Naval Architects, and the Institution of Mechanical Engineers. He joined the North-East Coast Institution of Engineers and Shipbuilders in 1886.

For some time prior to his decease he was seriously ill and died on the 8th of May in the 62nd year of his age.

He was an engineer of no mean ability and his whole time and attention was devoted to his profession.

MR. JOHN WALTER RAMSAY.

Mr. JOHN W. RAMSAY was born at Thirsk fifty-three years ago, and commenced his business career in the works of the Palmer Shipbuilding Co., where he soon rose to a prominent position, and was for some time in charge of the counting-house at the engine-works department. After nearly twenty years' service he severed his connection with this Company, for a more important post, carrying with him the goodwill of both officials and workmen.

The next appointment was with Messrs. John Spencer & Sons, at Newburn, first as chief of the commercial department and

later as secretary, after it was converted into a Limited Company, the chief work of this transaction falling upon Mr. Ramsay, the directorate testifying to the very able way in which it was carried out.

In 1890 Mr. Ramsay took up his appointment as secretary to Messrs. John Penn & Sons, at Greenwich, and on the transfer of this well-known business to the Thames Ironworks Co., he retained his connection with these works till the time of his death, which occurred on the 23rd October, 1905, after two days illness, from a severe attack of phlebitis.

Mr. Ramsay was very much esteemed by all with whom he came in contact, his genuine good nature and pleasing manner making him friends in all ranks.

He joined this Institution as an Associate Member in 1885, shortly after its formation.

SIR THOMAS RICHARDSON, B.A., J.P.

Sir Thomas Richardson, Kt., who was the son of the late Mr. Thomas Richardson, for many years member of Parliament for the Hartlepools, being the first candidate chosen by the Liberal party after the formation of the Parliamentary borough in 1867, was born at Castle Eden in the closing days of 1846, and educated at St. Peter's School, York, Rossal College, and Magdalene College, Cambridge, where he graduated as B.A. On leaving the University in 1868 he became associated with his father in the management of the Hartlepool Engine Works. This business had its beginning in Castle Eden about sixty-nine years ago by Sir Thomas's grandfather, who was established as a maker of locomotives and stationary engines. The founder was succeeded by his son, the late Mr. Thomas Richardson and father of Sir Thomas. He transferred the business in 1847 to Hartlepool, where he acquired the works which had been built in 1839 for the Hartlepool Iron Company. In these new works the manufacture of locomotives and stationary engines was soon superseded by that of marine engines, and the construction of these eventually became the speciality of the firm.

It may be interesting to note that the grandfather of the late Sir Thomas Richardson built the first vessel ever launched at the Hartlepools. She was called the "Isabel," and associated with

him in the construction of the boat was a Mr. Parkin, the firm being known in that day as Richardson & Parkin. Other firms that grew and prospered around them underwent various changes of name and title. The Middleton (Hartlepool) Engine Works, however, which were as scientifically equipped and organised as any to be found in the country, remained always under the control of the Richardsons.

On the death of his father in 1890, Sir (then Mr.) Thomas Richardson became senior partner in the firm, where his technical qualifications and personal energies found full scope. Associated with him were his brothers, Mr. William John Richardson and the Rev. Charles E. Richardson, the latter of whom, having a benefice at Redmarshal, took no practical part in the business. Their engineering works had gradually developed on all sides; Richardson's marine engines were known everywhere, and no industrial establishment did more to promote the general adoption of the triple expansion marine engines. Since 1883, when Messrs. Richardson built their first triple expansion engine for a cargo boat (the s.s. "Para," owned by Messrs. Steel, Young & Co., of West Hartlepool) the proved utility of the system led to its universal adoption. They were also very successful in converting existing compound engines to the triple expansion principle. Immense pumping engines, with a capacity of three million gallons a day, lifting to a height of 600 feet, were constructed for the East London Waterworks, and steamers belonging to the Castle and Orient Royal Mail Companies were engined by the firm. In 1900 an amalgamation was effected with the firms of Sir Christopher Furness, Westgarth, & Co. (Limited), and William Allan & Co (Limited), under the style of Richardsons, Westgarth, & Co. (Limited). Sir Christopher Furness became chairman, and Sir Thomas Richardson vice-chairman of the new Company.

Sir Thomas's first entry into public life was as a member of the Middleton Local Board, and on the incorporation of the township with the borough of Hartlepool in 1883, he was elected to the Town Council, and was not long afterwards elevated to the aldermanic bench, of which he remained a member up to the time of his decease. He was Mayor of the borough in Jubilee year (1887), and continued in the office during the following year, and from 1888 to 1892 he served on the County Council as repre-

sentative for the Northern Division of Hartlepool. In 1895 he was elected member of Parliament for the Hartlepools, which seat he held till the general election in 1900, when he was defeated by Sir Christopher Furness.

On the occasion of her late Majesty's Diamond Jubilee (1897), Sir Thomas was knighted as a recognition of the value of his work in varied spheres of activity. In October of the same year he was made a freeman of the borough, and in the illuminated address which accompanied it, allusion was made to his "consistency in the pursuance of municipal good government," and his "evenness of temper under all circumstances and cordiality of manner."

Sir Thomas took a keen interest in the welfare of friendly societies. He was trustee and governor of the Hartlepools Hospital, a vice-president of the Cameron Memorial Hospital, West Hartlepool, and a representative of the Board of Trade on the Port and Harbour Commission. In addition to holding the office of vice-chairman of Richardsons, Westgarth & Co., Ltd., he was chairman of the Manchester and Salford Shipping Co., Ltd., and also of the High Speed Stamp Co., Ltd., and a director of the Northern Counties Electrical Supply Company. He was a deputy-lieutenant for the county of Durham, a magistrate of the county, and also of the borough of Hartlepool, a member of the Council of the Institution of Mechanical Engineers, a member of the Institution of Naval Architects, and a Fellow of the Statistical Society. He was also chairman of the Tees and Hartlepool Engineering Trades Employers' Association from its formation; vice-chairman of the North-East Coast Engineering Trades Employers' Association; also a member of the Emergency and Finance Committees of the Engineering Employers' Federation.

He joined the North-East Coast Institution of Engineers and Shipbuilders in 1888, and in 1894 he was elected President, which office he held for two years. His kind and genial manner and his devotedness to the duties of the office won for him the admiration and esteem of all the members.

Sir Thomas had been ill for about a month, and a week before his decease his condition became so critical that an operation was considered necessary. This was successfully performed and hopes were entertained of his recovery, but a

relapse took place from which he never rallied. He died on 22nd May, 1906.

He leaves a widow, Lady Richardson, daughter of the late Rev. John Cooke Faber, rector of Chichlade, Wiltshire, and a family of seven sons and two daughters.

MR. ALEXANDER TAYLOR.

Mr. ALEXANDER TAYLOR, who was the younger son of Mr. William Taylor, of Tweedmouth, was born on the 8th of March, 1844.

In 1860 he entered the works of Mr. George Clark, engine-builders, of Sunderland, as an apprentice, after which he was employed at Messrs. Thomas Richardson & Sons (now Messrs. Richardsons, Westgarth & Co.), Hartlepool. In January, 1870, he was appointed works manager to Messrs. T. Clark & Co., Elswick Marine Engine Works, Newcastle-upon-Tyne. He commenced business on his own account at Newcastle-upon-Tyne, as consulting engineer, in April, 1872, and soon built up a large and lucrative practice.

He joined the North-East Coast Institution of Engineers and Shipbuilders at its inauguration in 1884, and was elected an ordinary member of Council. In 1886 he was elected a Vice-President, and from that date up to 1895 when he retired, he occupied a seat in the Council either as Vice-President or ordinary member of Council but he continued a member of the Institution up to the time of his death.

He served on many of the sub-committees and took considerable interest in the general business of the Institution.

In December, 1885, a sub-committee of seven members was appointed by the Council of the Institution "to investigate and endeavour to formulate a simple but comprehensive rule or measure of the power of marine engines and boilers, which being in a measure scientifically sound and commercially convenient, shall be applicable to the various types and proportions which may obtain in practice." The Committee appointed were Messrs. W. J. Clark, of Sunderland (chairman), J. Brockat (Lloyd's Register), J. H. Irwin, F. C. Marshall, B. G. Nichol, Alex. Taylor and R. L. Weighton. Shortly after the formation of the Committee, Mr. W. J. Clark had to retire on account of ill-

health and Mr. J. Brockat was removed by death. Mr. William Boyd was then appointed chairman and the late Mr. W. Kilvington was appointed to fill Mr. Brockat's place. The labours of this Committee extended over a period of about three years. Mr. Alexander Taylor was an ardent worker and the decisions of the Committee were eventually brought before the Institution in a paper, read in 1890, by Prof. R. L. Weighton, entitled "The Normal Indicated Horse-power of Marine Engines."

He was particularly identified with the introduction and success of the triple-expansion engine, and in 1885, he read a paper before the North-East Coast Institution on "Triple Expansion Engines." He invented a particular form of pontoon dock, and in 1888 he read a paper before the Institution on "Pontoon and Floating Docks." He was identified with the inception and directorate of the Tyne Pontoons and Dry Dock Co., Wallsend-on-Tyne, also the Manchester Pontoons Co., Manchester.

In 1890, Mr. Taylor, in conjunction with the late Mr. W. Kilvington, read another paper before the Institution on "Boiler Furnaces."

He also gave much attention to the stability and stowage of ships, and he invented a stability indicator for showing the initial stability and stowage of ships at any displacement. In the year 1884 he read a paper on this subject before the Institution of Naval Architects, of which he was likewise a member.

In his profession he was held in high esteem by his colleagues, and was always ready to give generous advice and assistance to any who approached him. Naturally he was of a retiring but at the same time genial disposition, and gained the goodwill and esteem of all who knew him.

Mr. Taylor practically retired from business about twelve years ago. He died on the 8th of February, 1906, in the 62nd year of his age, after an illness extending over several months.

MR. CONRAD WHITE.

Mr. Conrad White was the son of a surgeon widely known and esteemed in the district round Shotley Bridge. Mr. White began his career in Sunderland, where he served his time as a mechanical engineer in the old Bishopwearmouth Iron Works.

He afterwards spent some time at Messrs. George Black's Works, Southwick, Sunderland. Coming to Newcastle, he was, for many years, chief in the designing department of Messrs. Thompson, Boyd & Co.'s Spring Garden Engine Works, continuing there throughout a period marked by the evolution of the marine engine from its early form to its present triple-expansion type of construction. In 1873 he entered into partnership with Mr. Harry Gill, consulting engineer and the firm of Gill and White became widely known in the north-east district; but although still identified with it at the time of his death, he had for some years previous retired from active business practice.

Much of his leisure of late years was devoted to philanthropic work. He was a zealous member of committee, and supporter of the Blind Asylum. He was equally interested as a member of the Burial Board of St. Andrew's, and it was immediately after attending a meeting of this Board of which he was Chairman, on the 22nd of November, 1905, being then in his 70th year, that the seizure occurred, which terminated fatally in half an hour in the presence of his distressed colleagues. Up to this moment he had appeared to be in his ordinary good health and spirits.

Mr. White was a man of wide reading and culture, and a member of the Newcastle Society of Antiquaries. He joined the Institution of Engineers and Shipbuilders when it was formed in 1884, and though he took no active part in its affairs, still he was deeply interested in its proceedings. To his colleagues and to all who enjoyed the privilege of his friendship, he was endeared by his manly sincerity, his depth of sympathy, and his unfailing constancy.

MR. WILLIAM WHYTE.

Mr. William Whyte, who died at East Rigg, Corbridge, on June 15th, was a son of Captain Alexander Whyte, and was born at Rothesay, Bute, in 1837. After serving his time at Greenock, he entered the works established by Rankine for engineering graduates at Port Glasgow, and on the close of this experimental workshop, he left the Clyde and was engaged by Messrs. Penn, at Greenwich. Whilst there, an opening occurred in India and his services were transferred to Bombay, where he eventually became superintending engineer of a fleet

of cargo steamers trading on the Malabar coast. The transition to higher pressures had already begun, and Mr. Whyte returned to England to superintend vessels sent home to be "compounded." Leaving for India once more, he followed the success attained under the transformed conditions of working. About 1872 he became superintending engineer to Messrs. Watts, Milburn & Co., who were adding to their fleet an important class of vessels for the Eastern trade, represented by the "Hankow," "Whampoa," "St. Osyth," and others whose engines he superintended during construction. When a change was made in the firm, Mr. Whyte began a professional career on his own account and for many years acted as consulting and superintending engineer for several firms of shipowners. Latterly he developed a system of metallic packing, in the manufacture of which he became interested and in which he achieved a remarkable success. For the last few years, however, he had retired from business, living chiefly in his picturesque house overlooking the valley of the Tyne at Corbridge. Here, after a strenuous and eventful life, his abiding love of literature and of natural objects gave charm to his presence among a circle of attached friends. He was a member of the Institution of Naval Architects and joined this Institution at its inauguration in 1884.

NORTH-EAST COAST INSTITUTION OF ENGINEERS AND SHIPBUILDERS.

GRADUATE SECTION.

PRODUCER GAS AND ITS USES.

By W. H. WADDINGHAM. *

[Read before the Graduate Section of the Institution on October 31st, 1903.]

The use of gas for various purposes in connection with engineering has increased very rapidly within the last decade, and may now be said to be in the front rank as a means of generating power. It is now over one hundred years since gas was first applied to public illumination. Since then the manufacture of gas has increased, notwithstanding other systems of lighting, till the quantity of coal gasified is over 15 million tons per annum.

The first record of an attempt to obtain power from an explosive mixture of gas and air is dated as far back as 1678, and the idea was to explode gunpowder in a cylinder.

But the mechanical difficulties of obtaining continuous and regular explosion with such a substance as gunpowder proved too much for the engineers of that time and entirely stopped progress. Over a century later we find records of patents setting forth the use of an explosive mixture of gas and air. One patent describes an impulse turbine driven by the force obtained by the products of an exploded mixture impinging on

* Awarded books to the value of £3.

its blades. Another, in 1801, sets forth the advantages of compressing the gas and air before explosion—a principle on which the present engines have been made a success. From this date little progress was made till, in 1876, Otto brought out an entirely new design of the type now familiarly associated with his name. This was the first successful engine and its production marks a period from which the gas engine became a serious competitor against small steam engines. There was still, however, an obstacle which stopped all marked advance in size and power. So long as they had to use ordinary town's gas they could not compete with the larger class of steam engines; and the successful advances of the present day are mainly due to the gas producer. Producer gas is the generic name of the product of the slow resolution of solid fuel. As distinguished from the ordinary method of making coal gas by externally heating coal in a closed retort, in the producer system the heat is obtained in the interior of the producer by the combustion of the solid portion of the fuel which is being gasified. It has become the fashion to attach the name of the inventor of a producer to the product of that apparatus, and thus we speak of Mond gas, Dowson gas, etc. There are many differences in the details. Some producers use anthracite, others use bituminous slack, some use a much larger quantity of steam than others, but the principle of the process and the resultant gas is much the same with the various methods.

By passing CO_2 through incandescent carbon, owing to the high temperature, it is converted into CO, an inflammable gas. Hence by blowing air through incandescent carbon we obtain CO—carbon monoxide. The efficiency of thus converting our fuel into CO is only 70 per cent. owing to the lower calorific value of CO compared with carbon, and the loss of heat in the escaping hot gases which become cooled in the gas mains or before use. But this apparent loss in making the gas may be lessened in two ways. First, by retaining the heat as far as possible in the gas formed, and secondly, by employing a chemical reaction to utilize the heat and thus increase the calorific value of the gases. Some of this heat which we desire to save may be utilized in decomposing steam forced into the producer, forming hydrogen, and CO, carbon monoxide. Some heat may be transferred from the issuing gases in a regenerator

to the air about to be forced into the producer by the steam jet. By these means the efficiency of the process of obtaining the available heat of the fuel may be increased to 80 or 85 per cent. The efficiency of burning coal in an open grate may be taken as about 90 per cent., 10 per cent. of the heat of converting C to CO_2 being absorbed in evaporating water in the coal, and transforming the solid into gaseous matter. The gas made in a producer is generally of a uniform quality and hence the amount of air required for complete combustion can be regulated to a nicety. Ordinary producer gas has a calorific value of 120 B.T.U. per cubic foot, compared with 650 for coal gas, 100 for blast-furnace gas, and 140 for Mond gas.

The conditions for a good working producer are:—

(1) Complete gasification of the fuel. The amount of unconsumed carbon in the ashes should not exceed 5 per cent.

(2) Continuous gasification. This condition has rendered obsolete the open hearth and closed hearth plants, as the process of cleaning the refuse ash away from the producer bottom interfered with continuous gasification.

(3) Good quality gas.

(4) Small heat loss in producer by radiation, etc.

(5) Small labour cost.

The speed of gasification varies from 8 lbs. per square foot per hour to 14, and the volume of gas is about 150,000 cubic feet per ton of coal gasified. In Mond's system of making gas (see Plate XXII.), the object in view is not only the use of the cheapest quality of bituminous slack or dross, but also the recovery, in the shape of ammonia, of a large quantity of nitrogen in the coal. The producer is of the ordinary water-bottom type constructed to allow of the removal of ash and residue without interfering with the continuous working of the producer. The process of combustion is carried out at a comparatively low temperature so as to prevent the formation of clinker and the destruction of ammonia. The blast is hot air and steam, and of the latter about two-and-a-half tons are used per ton of coal gasified. Of this large quantity of steam, about two tons are condensed, being undecomposed, and afterwards used again. In the small plants,

where the recovery plant would not pay, the steam used is only about one ton per ton of coal gasified, which considerably reduces the size of the boiler plant required for steam raising.

After leaving the producer, the gas goes through a regenerator and in passing heats the air-supply to the producer blast. After washing in a mechanical washer, the gas passes through an acid tower and has its ammonia removed by a dilute solution of sulphuric acid forming ammonium sulphate. The sulphate thus obtained is worth £12 per ton, and about 90 lbs. are obtained per ton of coal used, representing 9s. 6d. value. After deducting labour and costs of the recovery plant, a profit of about 5s. is left and this pays for a large percentage of the cost of the fuel. After further cooling, the gas is ready for use and enters the mains. Its calorific value is given at about 140 B.T.U. per cubic foot and about 40 per cent. is combustible.

As an illustration of the magnitude of this system of gas making, the South Staffordshire Mond Gas Company have obtained parliamentary powers to supply Mond gas over an area of 120 square miles for heating and power purposes. They charge 2d. per 1,000 cubic feet to large consumers and have installed a plant of 25,000 H.P. capacity, using 250 tons of cheap slack per day.

The blast furnace is the largest producer of gas at the present. The gas is merely a bye-product and much is needed for heating the blast for working the furnace. It is only quite recently that attention has been given to the economic use of the superfluous gas; which until recently could be seen at many iron works burning away, and wasting at the furnace tops. The quality of furnace gas is nearly as good as that obtained from some producers and of course is better where the furnaces are fed with coal than where coke is used. The amount available for use in excess of the requirements of the hot blast is about 90,000 cubic feet per ton of iron produced. Thus a furnace making 100 tons of iron per day makes incidentally enough spare gas to generate roughly about 3,000 H.P. with good gas engines, and about 1,000 I.H.P. by firing the boilers with gas and using a steam engine.

There are various other methods of gas making for heating or power, namely, coke-oven gas, water gas, etc., but the limits of this paper will not admit of their inclusion.

Considering the use of gas for furnaces, it is well known that many types of furnaces fed with coal are most wasteful, particularly furnaces for forging, welding and reheating ingots, etc. The application of gas to these furnaces has resulted in a great saving of heat, and also in the use of cheaper coal in the producer than could be used in direct coal firing. The high temperatures required for steel melting could hardly be obtained with solid fuel, and gas has supplied the want when used in conjunction with a reversible heat regenerator. There are many examples of gas furnaces as applied to engineering and shipbuilding. At the works of the Weldless Steel Chain Company, Gartsherrie, there is a Weardale type of furnace used for heating the cruciform section bars before they pass through the chain-making machine. The furnace is 30 feet long and 2 feet wide, and the bar, 45 feet long, is heated from cold to a white heat while passing through the furnace at a rate of 8 feet per minute, this being the rate required by the machine.

Messrs. Cochrane, Annan, also have a gas fired furnace for heating large boiler plates, and the saving of time is said to be quite half compared with a coal fed plate furnace. The furnace is 11 feet square and the coal used is said to be 30 to 40 cwts. per day of 9½ hours, compared with double this amount used in a good coal fed furnace. Furnaces of this type are also used in several shipyards for heating frame bars, etc., and no doubt several members present will be able to give some information of the results obtained. The intensity of the heat can be better regulated with gas, and kept more constant all over. It is very difficult to obtain an even heat in a plate furnace containing a large plate, the portions next the coal fires being much hotter, and there is always a risk of overheating these parts in endeavouring to get other parts sufficiently hot. Gas-firing is also used for foundry stoves, annealing and case-hardening furnaces, and has the advantage of cleanliness and steady heating. Messrs. Marshall & Sons, Gainsborough, have several gas-fired foundry stoves. These are said to give fully one-third more work than the old ones, as the stoves can now be charged three times a day instead of twice as formerly. They are also cleaner and give a more regular heat, and the heat can be better regulated as required. Gas is also particularly applicable to the drying of large foundry moulds such as

cylinders, etc., and will doubtless largely displace the present coke fires which are placed in the mould for drying them. The labour would be reduced and the cleaning up before putting in the cores would be much easier.

Gas is also being used for firing boilers of various designs, not so much for the economy as for using gas which is formed as a bye-product of some other industry. At many of the local collieries, where coke is made for foundries and blast furnaces, all the steam required for the colliery plant is obtained from the coke-oven gas. The boiler heating surface has an increased evaporative power, due to the more continuous application of the gas flame. The labour of firing the boilers is done away with, all the labour required being for the regulation of the gas supply and the feed, etc. The cost of repairs is reduced and the life of the boiler lengthened, owing to the regularity of the temperature preventing the alternate strains of expansion and contraction which are inevitable with coal firing.

Another novel method of steam raising by gas is by utilising the heat contained in the exhaust gases leaving gas engines. This increase in economy is an important consideration. Formerly the heat of the exhaust gases was wasted and the steam required for the saturation of the producer blast had to be obtained in the usual way. Results recorded with a 500 horsepower gas engine show that by passing its exhaust gases through a specially designed boiler, their heat can be so effectively utilized as to provide all the steam required in the gas producers which are supplying the gas engine. This system of steam raising has been adopted in one installation of gas engines producing several thousand horsepower with Mond gas, and is said to be giving entirely satisfactory results.

Gas Engines.—Undoubtedly the most interesting part of the study of the use of gas is its application to gas engines. The first Otto gas engine that was placed before the public was at the Paris Exhibition of 1878. Since then the progress of power production by this means has exceeded all anticipations. There are now many firms making engines of 200 H.P. and over, though the larger sizes of engines now running have only been very recently made. Considered as a heat engine, the gas engine has advanced very fast and the larger sizes have a thermal efficiency of about 25 per cent. With this we may com-

pare the efficiency of a modern triple-expansion marine engine, which is about 17 per cent. Experts express their opinion that the gas producer and engine constitute the cheapest known form of producing electrical energy on a large scale from coal. Moreover, engines can now be obtained in sizes large enough to suit even tramway stations and are proving themselves capable of running alternators in parallel quite as well as the best steam engines. The leading builders are prepared to give a guarantee of good governing, sufficient for the above purpose. Direct coupled sets, with two or four single-acting cylinders, have been used, driving alternators in parallel, but usually double-acting tandem type are now preferred. Two engines of 4,000 H.P. each have just been built in America and will shortly be put into service. I have no particulars of these engines, but as far as I know they are the largest ones yet built.

The following are the leading type of engines:—

I.—Four-stroke cycle single-acting engines. These are made as horizontal engines, with from one to four cylinders arranged when there is more than one cylinder in tandem or *vis à vis*, and give powers up to 2,500 H.P. with the four cylinders. With the double tandem engines two impulses are obtained per revolution. Vertical engines with from one to four cylinders are also made up to 1,000 H.P.

II.—Four-stroke cycle double-acting engines. These are made as horizontal engines with from one to four cylinders arranged with one or two cranks and tandem in the larger sizes. The powers run up to 4,000 H.P. and with the double tandem engines four impulses are obtained each revolution. Vertical two-cylinder engines are also made up to 2,000 H.P.

III.—Two-stroke cycle single-acting engine. This is the Oechelhauser type and is made with one or two cylinders up to 2,000 H.P., the latter engine getting two impulses each revolution.

IV.—Two-stroke cycle double-acting type. The Korting engines work with this cycle, obtaining two impulses each revolution just like an ordinary double-acting steam engine. They are made with one or two cylinders in sizes up to 2,000 H.P.

Type I.—In order to obtain great mechanical power from one single engine, various makers have thus adopted different methods. The simplest way is to increase the dimensions and retain

the four-cycle single-acting engine, the first one mentioned previously. This leads to large cylinders and heavy parts and flywheel, as only one working stroke is obtained every two revolutions for each cylinder. The engines made by the John Cockerill Company and Richardson, Westgarth & Company are of this type. There is a 600 H.P. engine made by the former company running at the Ormsby Iron Works, Middlesbrough, using blast-furnace gas and driving a blowing cylinder. The leading sizes are: gas cylinder, 51 inches diameter by 55 inches stroke, running at 78 revolutions per minute. The flywheel is in two halves and weighs 33 tons, being 16 feet 6 inches in diameter, while the whole engine weighs 160 tons and occupies a floor space of 52 feet 6 inches by 21 feet 9 inches, including the blowing cylinder. Governing is done on the hit and miss principle and good regularity is obtained with the heavy flywheel. The charge is electrically fired and the moment of explosion can be regulated as required while the engine is running. The cylinder, exhaust-valve and main bearings are water cooled and the cooling is efficiently carried out. The piston is also cooled, but here it is necessary to supply the water at a pressure of 60 lbs. per square inch to overcome the reciprocating action of the piston while the engine is running, a small force pump being used for this purpose. The method of starting this engine is interesting. A 6 H.P. electric motor, fitted with a pinion working spur gearing in the inside of the flywheel, is used. By thus turning the flywheel naphtha vapour is drawn into the cylinder through a special carburettor. The charge is then slightly compressed by reversing the motor and exploded by electric ignition. The impulse thus obtained suffices for two revolutions during the second of which a charge of gas and air is drawn in and compressed, and the explosion of this charge sets the engine going. The trials of a 600 H.P. engine made in Belgium, show a thermal efficiency of 25 per cent., using gas of 110 B.T.U. The I.H.P. was 886 at 93 revolutions and the mechanical efficiency 81·8 per cent. and gas consumption 83 cubic feet per I.H.P. hour.

The Premier Gas Engine Company make engines up to four cylinders, working on this four-stroke cycle single-acting principle. In their tandem engines the explosions in each cylinder occur at alternate strokes and thus reduce the

maximum strains. They also fit a novel method of scavenging which does not necessitate another idle revolution. Towards the end of the exhaust stroke air is forced through the cylinder at a pressure of 3 lbs. per square inch and drives out the products of combustion through the exhaust valve. The air for this purpose is obtained from an inclined pump placed above the engine and operated from the main crank by a rod jointed to the connecting rod bottom end. One air pump serves to scavenge two gas cylinders and is said to entail very little extra complication. Governing in this engine is effected by varying the lift of the gas valve and thus controlling the supply. As in the Cockerill engine, the pistons and exhaust valves are water cooled, the former by a water service consisting of a hollow swinging arm and trunnion to the hollow piston rod and thence to the piston water space. Regarding the scavenging of the cylinder and combustion chamber, many makers do not consider the "game to be worth the candle;" but those makers who do fit a scavenging arrangement claim the following advantages:—

(1) The complete expulsion of all the very hot products of combustion. By filling the cylinder space with cool air all chance of fire-ignition or back firing is avoided.

(2) Owing to the explosive charge being cooler and purer and not contaminated with burnt gases, the power developed by the explosion is greater.

(3) All working surfaces are kept cooler and the life of the valves increased.

(4) Owing to the coolness of the charge and cylinder walls, much higher compression is permissible without any fear of premature ignition.

Type II.—Four-stroke cycle double-acting engines. These engines are logically a great improvement on the single-acting type, as by duplicating the valve gear, the power is doubled for the same sized cylinders and without increasing the working stresses. Where two cylinders in tandem are fitted every stroke is a working stroke. But the great difficulty has been the problem of designing a stuffing-box to keep tight against a pressure of 350 to 450 lbs. per square inch of highly heated and impure gas. The solution has come gradually, and now there

are many examples of stuffing-boxes which give satisfaction. The Nürnberg and Deutz Companies of Germany build double-acting tandem engines which are noted for their smooth running and good turning moments. The following figure (Fig. A) shows a transverse section through a large Deutz engine-cylinder, and Plate XXIII. shows a longitudinal section. Plate XXIV. illustrates a tandem engine made by the same firm. In the larger engines the whole of the weight of the piston

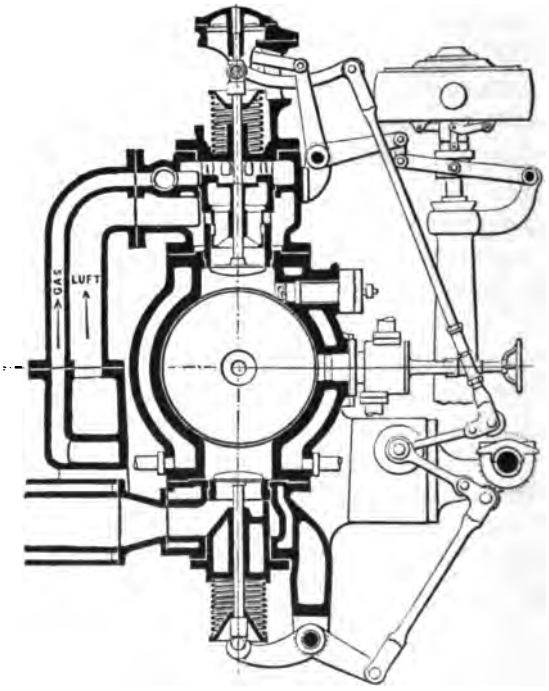

FIG. A.

and rod is carried on slides running in guides, at each end of the cylinder, the front one being the usual crosshead guide. Thus the load of the piston is taken off the cylinder bottom and the piston and liners suffer the least possible wear. This arrangement is also of advantage when opening out for examination or for overhauling, as the pistons and covers will slide out on the rods, the valves being left untouched. The cylinders of all engines using blast-furnace gas require to be cleaned out from time to time in order to remove the hard deposit of dust which is

mixed with the gas. The cylinders of the larger engines are made of cast steel and have hard cast-iron liners fitted while hot to ensure their being tight. Plate XXV. illustrates a 500 brake-horsepower double acting two cylinder gas engine. This engine was made by Messrs. Richardsons, Westgarth & Co., Ltd., for their own electric power station. The cylinders are 23⅝ inches in diameter by 31½ inches stroke and drive a generator at 135 revolutions per minute. The gas consumption of a tandem engine averages 90 feet of blast-furnace gas of 100 B.T.U. per H.P. hour, or 20 feet of rich coke-oven gas of 450 B.T.U. For smaller loads the consumption increases to about 40 per cent. more at half load. The cooling water required is considerable, about 11 gallons per H.P. hour, raised a temperature of 35° Fahrenheit.

Type III.—Two-stroke cycle single-acting or Oechelhauser engine. This engine has a very long explosion cylinder and is fitted with two pistons connected by one front and two side connecting rods to a three-throw crank shaft. Thus, at one position of the centre crank the pistons are wide apart, and at the other opposite position they are close together. There are no piston-rod stuffing-boxes. The cylinder is provided with an exhaust port at one end and two sets of ports at the other. Of the latter, one is used for the admission of the working charge of gas and air and the other for a scavenging volume of air which is forced through the cylinder before the introduction of the working charge. Main gas and exhaust valves on the cylinders are thus entirely done away with and a double-acting pump forces in the scavenging and working charges, one end being used for each and having its own separate valves. The consumption of gas is said to be greater with this system than with the four-stroke cycle engines.

Type IV.—Two-stroke cycle double-acting or Korting gas engines. In this engine the exhaust port is situated in the centre of the cylinder and is opened each stroke as the piston passes it. Thus no exhaust valves are required and the piston is very long, *i.e.*, the length of the stroke less the width of the exhaust port. The discharge of the products of combustion and the admission of the new charge must take place during the short period of the outer or inner dead centre position of the piston, that is, while the exhaust port is uncovered or about

ENGINES.

Twin screw triple, about 8 inches—12 inches—20 inches by 15 stroke. Revolutions, about 240. I.H.P., about 350. Water pressure, about 160. Yarrow W.T. boiler. Grate surface, about 36 square feet. Heating surface, about 1,100 square feet. Bronze propellers, about 4 feet 8 inches diameter, with about 9 square feet surface each.

Fire engine.

Bilge donkey to be also suitable for a fire engine able to supply to landing hose-pipes. All hose-pipes, couplings, etc., to London Fire Brigade pattern.

Electric light engine.

De Laval capable of running thirty 16 candle-power lamps, also a 36-inch stokehold ventilating fan.

Engine room telegraph.

In duplex, port and starboard, with brass stand in bridge.

Condenser and auxiliary machinery.

Light sheet steel galvanized condenser; cooling surface about 750 square feet. Red metal ⅝-inch tubes 6 feet 2 inches long. Tube plates, rolled bronze, ⅞-inch thick. Checked ferrules 1 inch diameter, pitched fairly open for retapping.

Air and circular pump.

Horizontal type, brass water and air pumps complete.

Feed pumps.

Vertical pattern in duplicate with feed float tank.

SHELTERS, ETC.

To be about 8 feet 6 inches wide and constructed to the same specification as the most up-to-date electric railway cars. Finished off internally with light polished oak and ash. Silver plated electric fittings and holders. Transverse seats. Rattan spring seats with reversible backs. Electric lamps throughout including navigation and overhead gangway lamps.

Steam heating.

Steam (Rowe's corrugated) pipe led round saloons and covered over with perforated brass casings.

Lavatories.

Fitted up in first-class railway manner, silver plated fittings throughout.

By permission of the meeting, the SECRETARY read the following communication from Mr. Cherry:—

As an ex-member of your Association, and one who is actively engaged managing and working a river passenger service of some eighteen boats and twenty landings on the river Tyne, I should like the opportuntiy of briefly expressing my views on the Thames new passenger boat service; particularly so as my efforts to get in touch with the Council's authorities, with a view to trying to get them to adopt, or even consider, designs which I submitted, were of no avail.

MARINE EVAPORATORS.

By JOHN NEILL, B.Sc. *

[Read before the Graduate Section of the Institution on March 11th, 1905.]

Within the last few years the use of evaporators on all classes of steamships has become so common that I thought a paper dealing with some of the various makes, their construction and working, would be beneficial to some who have not had an opportunity of studying these machines.

The necessity for evaporators arose, when, with the increase of boiler pressure, combined with the temperature carried, the presence of an excessive amount of scale on the internal surfaces of the boilers, due to the presence of solids dissolved in water, such as sulphates and carbonates of lime, was found to be very detrimental to their working.

In all marine engines there is a certain amount of water lost due to leakage at the glands, the chief places being the piston rod, valve spindle and feed-pump glands, and before the use of evaporators became so universal the practice was to make up this loss by admitting sea water to the hotwell. As this was a very simple operation, there was always the danger that care would not be taken to keep tight glands, and so result in an excessive amount of salt water being admitted to the boilers. This salt water, when evaporated in the boiler, deposited scale, which rapidly decreased the conductivity of the metal and so the efficiency of the heating surface. At first, when it was found that distilled water was necessary for feed make-up, this was obtained by working the auxiliary boiler at lower pressure, but it was soon found out that the main boilers were only saved at the expense of the auxiliary and this boiler rendered non-efficient when it was wanted in port. This method was soon superseded by the use of evaporators.

* Awarded books to the value of £4.

Within late years, with the introduction of oil fuel, an additional need for evaporators has arisen. In ships fitted with oil-burning installations it is usual to use steam for pulverising the oil as it enters the furnace. All this steam is lost, so the water from which it is generated must be made up; therefore an extra large evaporator is needed.

Early Forms of Evaporators.

In its most elementary form an evaporator consists of a vessel containing salt water, which is boiled by the heat from a coil through which steam is passed. Before the days of marine evaporators, a similar apparatus had been in use in the sugar refineries for evaporating down the solutions to let the sugar crystallise out; and for economy evaporators were made double and triple effect, that is, the steam obtained by evaporating the first solution with boiler steam was used as the heating agent in the next vessel and similarly the steam from the second vessel was used to heat the third. This method, whilst very economical, had one great disadvantage, that is, it occupied too much space to be generally used on board ship.

To Messrs. Weir belongs the honour of introducing the marine evaporator in its present form. It was first introduced in 1884 and was then of the horizontal type. The shell consisted of a steel cylindrical vessel and the heating surface of a number of solid drawn copper tubes. The tubes were of U-shape, fixed to a tube plate at both ends, and were arranged in diagonal rows to permit of scaling. The whole tube surface was removable for cleaning by unscrewing the nuts which fixed the tube casing to the shell.

This horizontal type, whilst very efficient, was found to be rather inconvenient in the withdrawing of the tubes, so the vertical type was introduced three or four years later, and is the type now universally employed.

General Description of Modern Machine.

The modern type of evaporator consists of a vertical vessel, in the lower part of which copper coils are arranged, usually attached to steam inlet and drain chambers.

The steam inlet is usually a free opening, but the outlet from the coils to the drain is sometimes restricted in size so as to maintain the pressure in the tubes. The upper part of the vessel is usually quite free and forms the space in which the vapour collects when the water is boiled.

The arrangements made for withdrawing and cleaning the coils is what is subject to most variation in the different designs, and this will be shown by a comparison of the different types.

The usual mountings on an evaporator are:—Steam inlet valve, vapour valve, feed check valve, brine valve, drain valve, blow off cock, safety valve, gauge glass, pressure gauge, compound gauge, salinometer valve, air cock.

The feed water is usually pumped into the evaporator by means of a small force-pump, worked from the main engine-pump levers, and this pump usually draws from the circulating discharge, so as to get the water as hot as possible. In some large passenger boats it has been found advisable to fit a small independent pump for feeding the evaporator.

Size of Evaporator to Fit.

The size of the evaporator is fixed by the amount of the loss of water due to leakage, and the usual amount to allow for in a modern marine engine is from 5 to 8 per cent. of the total feed water. Assuming that with all auxiliaries an engine takes 15 lbs. of steam per I.H.P., then the leakage is from 8 to 12·8 tons per 1,000 I.H.P. per day. It is usual to fit an evaporator of capacity of 10 tons per 1,000 H.P. per day, and this has generally been found to be quite sufficient.

Methods of Connecting the Evaporator.

There are three common methods of connecting the evaporator, depending on where the vapour from the evaporator is put. In all cases boiler steam is used in the coils. A comparison of the relative efficiencies of the three methods, as given by Mr. D. B. Morison, may be of some interest. In the first method the vapour is discharged to the hotwell and is there condensed in the feed water. This method is theoretically most efficient as neglecting radiation, which is practically constant;

no heat is lost, but all the heat given to the vapour is restored in heating up the feed water. Practically, however, it is found that there is always a loss of heat due to brining, that is, discharging a certain quantity of salt water to keep down the density. It is found that the net cost of producing 1 lb. of steam is 68·1 T.U., or the amount of coal required to produce 1 ton of steam is 15·7 lbs., taking the boiler efficiency as 66·6 per cent.

The second method consists in discharging the vapour to the L.P. casing and allowing it to do work in the L.P. engine. In this way a small part of the heat is utilised and the net cost works out at 845 T.U. per lb. of steam or 196 lbs. of coal per ton of steam.

The third method is that of discharging the vapour to the condenser, which, although most universally adopted, is the most wasteful of all. All the heat due to the latent heat of the steam is given up to the condensing water and so thrown overboard, and the net cost works out at 1,124 T.U. per lb. or 260 lbs. of coal per ton of steam produced.

This method of discharging to the condenser is 16½ times as expensive as that of discharging to the hotwell, but is the one most usually fitted, on account of its simplicity in fitting and as it is the only method which can be used in port. Another disadvantage of discharging into the hotwell is that there may be other drains, such as the feed heater, into the hotwell, and the addition of the evaporator vapour would make the water too hot for the feed pumps.

An additional advantage claimed for the method of discharging vapour to the condenser is that the evaporator may always be worked at a vacuum and so no feed pump will be required. In this case a connection is usually made in the circulating discharge, so that water enters the evaporator due to the head of water in the pipe. If possible, it is always better to fit a two-way cock, so that the vapour may be discharged either to the condenser, as when working in port, or to the hotwell when working at sea.

Another method of connecting is to take steam from the I.P. casing, but although there is a slight advantage as regards economy, it is outweighed by practical reasons, both with respect to cleaning and testing for surveys, which render the method rather unsatisfactory.

Priming.

Some years ago Messrs. Weir carried out some experiments to find out the relation between the maximum quantity of water evaporated without priming and the pressure carried in the shell.

A number of pressures in the shell were first fixed and the maximum quantity evaporated without priming measured for each of these.

In order to do this the pressure in the tubes was gradually increased and the pressure in the shell kept constant by adjusting the outlet valve, until the vapour just showed signs of salt water by the silver nitrate test. The pressure in the tubes was then slightly diminished and the quantity of water evaporated per hour measured.

This was done for the series of shell pressures, and on examining the results it was found that the weight of steam evaporated per hour was almost exactly proportional to the density of steam in the shell, or that the volume of steam which can be obtained without priming in any evaporator is constant, but as the density varies directly as the pressure, the weight of steam is proportional to the density.

Scaling.

In most evaporators the connections are arranged so that the door may be taken off and boiler steam turned on the coils. If now cold water be played on the coils it will cause the greater part of the scale to crack off. This may also be done without removing the door, by blowing down the evaporator and allowing it to quickly fill up with cold water. This water, when it comes into contact with the hot coils, will cause the scale to crack off, due to the expansion and contraction of the copper. The scale may be removed by the hand-hole. It is advisable to periodically clean the coils by scraping them.

The effect of a coating of scale on the coils has been shown by a series of experiments carried out by Mr. D. B. Morison. In these experiments the quantity of water evaporated in successive hours was measured in a trial extending over 144 hours. The evaporation during the first hour was found to be 32 gallons, but rapidly fell to 8½ gallons per hour at the end of the twelfth hour

and to 4 gallons in the forty-eighth hour, when the coils were covered with a scale $\frac{1}{32}$ inch thick. A succession of experiments were then carried out in which the scale was cracked off the coils by the method explained above, and at the end of 81 hours the rate of evaporation had risen to 6 gallons per hour.

These experiments show the very detrimental effect of scale on the conductivity of a surface and the necessity for continually cracking off the scale.

Brining.

As the water is evaporated off from salt water, the remaining liquid becomes denser, and in an evaporator this density must not be allowed to rise above a certain amount, or the coils will become heavily coated with scale or even salt crystals. The usual density at which an evaporator is worked is from $2\frac{1}{2}$ to 3/32nds. An automatic brining valve is sometimes fitted near the bottom of the evaporator, and if working under pressure, this valve may be always kept slightly open to allow some of the salt water to be blown to the bilges. If, however, the evaporator is working at a less pressure than the atmosphere, a connection must be made from the brining valve to the bilge-pump suction, so that the bilge pumps may draw off a certain amount of brine.

By suitably adjusting the feed and brining valves, the density in the evaporator may be kept constant.

Weir's Evaporator.

One of the best known of modern evaporators is that manufactured by Messrs. G. & J. Weir, and the following is a brief description of their standard type for merchant service.

This evaporator consists of a lower generating chamber and an upper steam-dome, both of cast-iron, bolted together. The heating surface consists of solid drawn copper tubes in the form of horizontal coils, which are expanded at their ends into vertical stand-pipes of cast-iron.

In order to make the heating surface uniformly efficient by keeping a constant circulation through all the tubes, the ends of the tubes in the outlet stand-pipe are contracted by the insertion of brass plugs, having small holes in them excepting the lowest or return tube, which has an open end, and so allows any

steam which comes through the small holes to be taken through the evaporator again, together with the condensed water which is drained to the hotwell. By this means there is always a difference of pressure between the inlet and outlet stand-pipes, and so constant circulation is kept up. The two stand-pipes are connected together by tie plates, the lower of which is hinged to the bottom of the casting so that the coils may be swung out for cleaning. Connection is made between the inlet stand-pipe

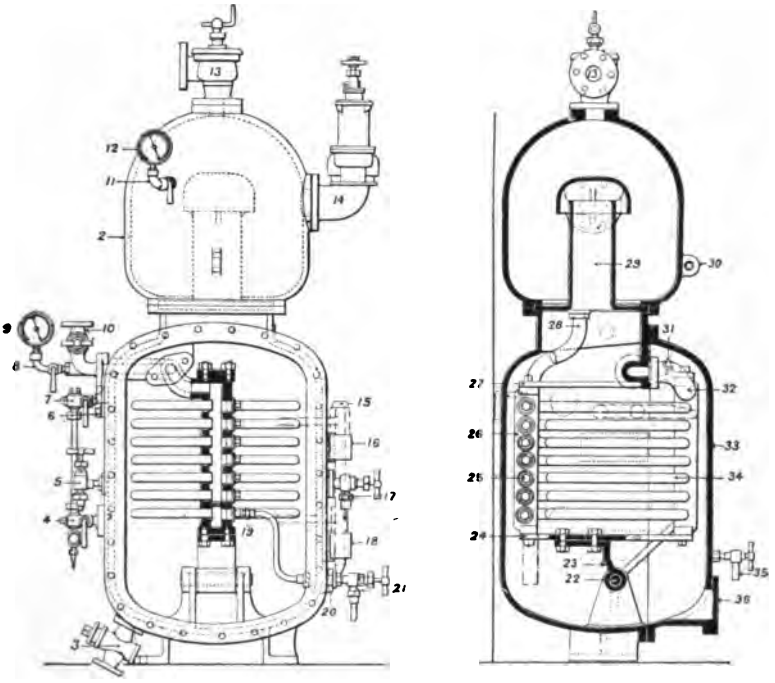

FIG. 1

and the main casting for the inlet steam, and this joint must be broken before the coils may be swung out (see Fig. 1). The generating chamber and steam-dome are separated by a diaphragm, from the centre of which a pipe is carried up into the steam space. Over the top of this pipe a hood or deflector is fitted. A return-pipe is fitted to lead any water which may have been carried up with the steam back into the lower chamber. With this arrangement it is claimed that priming is almost impossible within the ordinary working limits of the

machine. The steam inlet is placed near the top of the coils, whilst the drain is led from the bottom and is connected to the hotwell. The feed inlet is placed about the middle of the lower chamber, and the brine outlet almost directly opposite. A blow-off cock is fitted to the bottom and a gauge glass for the water level. A large door is provided on the bottom chamber, which door has a hand-hole to permit of the scale being removed as it accumulates in the bottom.

A salinometer cock for testing the density is fitted to the door. The mountings on the upper chamber are the vapour valve, safety valve, and compound gauge to show steam pressure in the shell.

The evaporator is fed by a small pump on the back of the engines driven by the pump levers, and draws from the circulating discharge.

Method of Working.

As the method of working the different types of evaporators differs very little, I will explain the method for the Weir's evaporator, and will only mention points of difference when considering others.

The evaporator is first filled to the ordinary working level, as shown by the gauge glass, with salt water, pumped from the circulating discharge, the drain valve is next opened and then the steam is admitted to the coils. The water is gradually heated until it boils and a pressure of about 7 lbs. allowed to accumulate in the shell. The vapour valve is now opened and adjusted to keep a pressure of about 5 lbs. in the shell. The evaporator is now in working order, and it is only necessary to adjust the feed water inlet so that when allowance has been made for blowing off, the density will be kept at the right amount, which is not more than 3/32nds.

The scale must be cracked off the coils at intervals, by the method previously explained of sudden expansion and contraction, and may be removed by the sludge door.

Caird and Rayner's Evaporator.

These evaporators are made in two types. In the first the coils are attached to the door and in the second the coils are

separate from the door and are attached to the main body of the evaporator. One of the main features of this make is the arrangement of the steam coils. Steam is admitted to an inlet pipe of brass which carries the coils, and is so arranged that the steam is passed through the uppermost four coils. On reaching the opposite brass stand-pipe, the steam is returned through the next two coils. It then passes through the next coil and returns by the last to the drain. By this means a constant circulation is kept up within the coils and all the heat possible is extracted from the steam. An arrangement of baffle plates is fitted in the top of the evaporator, by which priming is prevented and any water which may be carried up with the vapour returned to the evaporator. On the side of the main casting a small chest is bolted. This carries a float which regulates the feed inlet valve in order to keep a constant water level. No feed pump is supplied but the water enters by atmospheric pressure, due to the evaporator always being worked lower than atmospheric pressure. This has an advantage when the vapour is taken to the condenser, as less heat is required to raise vapour and so less is lost to the condensing water.

The evaporator is usually fitted low down in the engine-room, so that a good head of water may be obtained. A hand-hole is provided at the bottom for cleaning out. Suitable handling gear is fitted to facilitate the removal of the door for cleaning, etc. The usual mountings are supplied.

Kirkaldy's Evaporator.

These evaporators are constructed with an outer shell of wrought-iron or steel plates riveted together. On the front of this shell is riveted a casting which carries the door. The coils are in the form of vertical spirals, and in one type they are attached to the casting and in the other directly to the door. The door is then hinged on its lower edge and may be swung down for cleaning the coils (see Fig. 2).

The coils are connected through the door to inlet and outlet steam-pipes by means of mitre joints and capped nuts, which are on the outside of the door and thus not liable to corrosion of the screw threads.

The top and bottom coil connections show that a larger opening is given at the top, or inlet, than at the bottom. This keeps

a constant drop of pressure and so a constant circulation through the coils. The vapour valve fitted to this evaporator is of the equilibrium type and has a piston on the same spindle as the valve and working above it. The piston is open to the atmosphere on top and so the valve will be closed when the pressure in the evaporator drops below the atmosphere. These evaporators

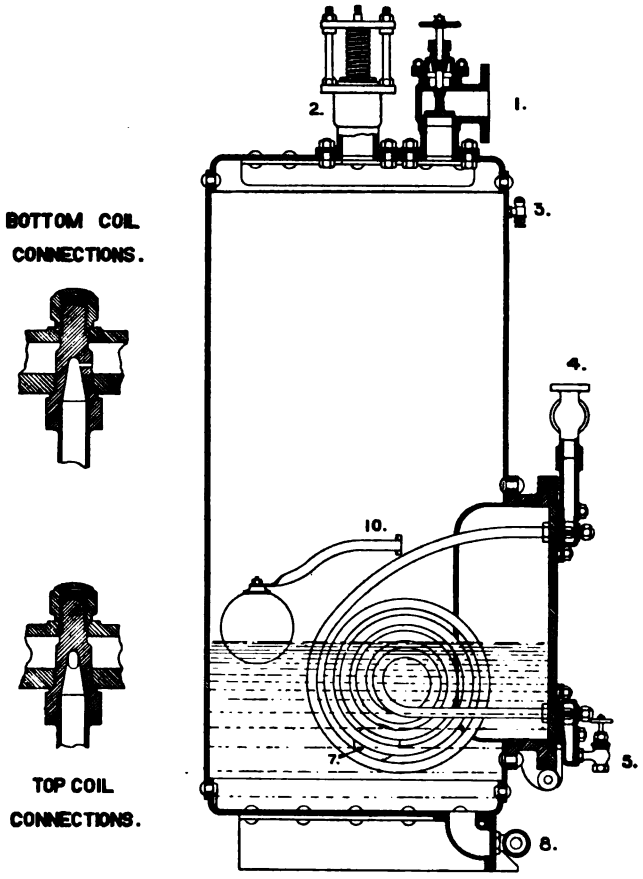

FIG. 2.

are usually worked at a slight pressure above the atmosphere, as much as may be had from the head of water from the circulating discharge pipe, so the water is fed in without a feed pump. The feed is controlled by a float which works an automatic feed and overflow valve. The valves are double-beat and are arranged

on either side of the fulcrum of the float lever, so that when the float drops the inlet valve opens and when it rises the overflow valve opens. Springs are fitted on the upper parts of the spindles which tend to keep the valves on their seats.

Brining is done automatically through the brining cock by the small pressure carried in the shell.

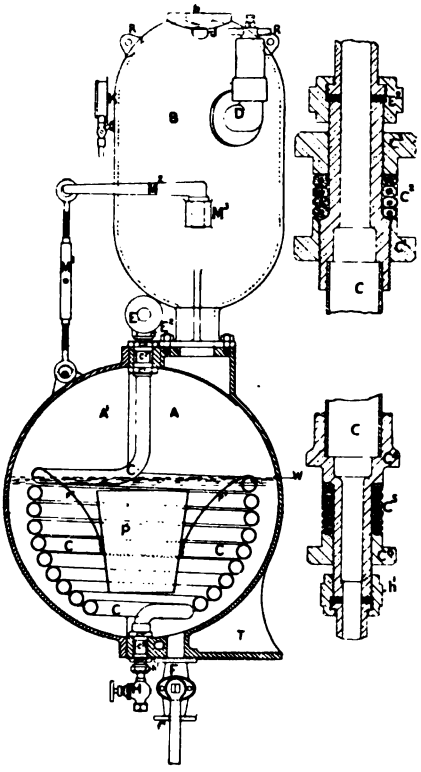

FIG. 3.

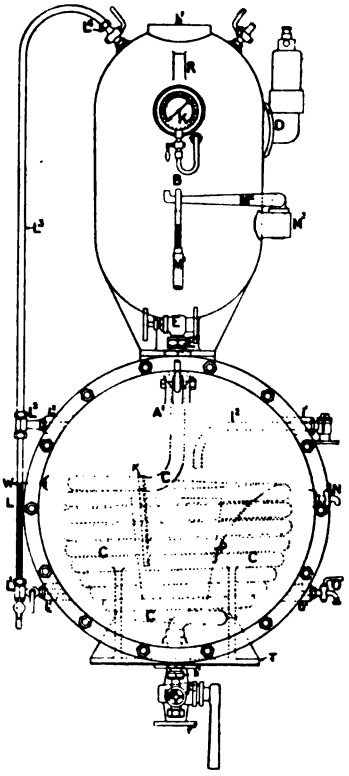

FIG. 4.

DAVIE & HORNE'S EVAPORATOR (see Fig. 3).

This evaporator consists of a lower spherical casing in halves, one half fixed supporting a spherical coil and the other half a removable door.

A steam-dome is bolted to the spherical casing and carries the usual mountings (see Fig. 4).

The coil is so arranged that it can be turned round on trunnions, and, as it projects beyond the face of the casing, it

may be easily cleaned all round. As the water-line about coincides with the centre of the casing, it is claimed, that, as the evaporator has large water-level area and large steam room compared with the heating surface and water capacity, priming is prevented.

As there are no flat surfaces, great strength is obtained and, if necessary, the evaporator may be worked at high pressure. A pump worked from the main engine pump levers is supplied to feed the evaporator.

Morison's Radial Evaporator.

This evaporator consists of a lower horizontally-arranged water vessel, provided with a vertical cylindrical steam-dome. Access to the heating tubes is got by removing the large door on the lower part and allowing it to swing aside on the pivotted arm.

The heating coils are connected by flanged joints to a horizontal standard, which forms the steam inlet and the outlet for condensed water. This standard, which is in the form of a double channel, is closed at one end, at which end it is hinged to a bracket attached to the inside of the evaporator and at the other end forms the steam inlet and drain. These joints are of the spigot-and-faucet type and are secured by a central bolt (see Fig. 5).

By this arrangement it will be seen that after removing the door it is only necessary to remove one nut and the coils may be swung out for cleaning and examination. The full boiler pressure may be put on the coils for testing, when, with the door removed, the joints are all in the front and are readily visible. The usual mountings are fitted. A special brining cock is fitted which consists of a small bye-pass valve on the side of the blow-off plug cock. This valve is kept continuously open when the blow-off cock is shut and may be adjusted so that the density of the water is kept constant. A spring-loaded valve is fitted to the condenser when the vapour is passed there and is set so that the vapour enters against the pressure of the spring. This spring may be adjusted to keep any required pressure on the evaporator.

A useful addition is sometimes fitted to this evaporator to overcome the objection of evaporating directly into the hotwell. This consists of a cast-iron vessel, into which steam from the

evaporator is admitted and so arranged to mix with and condense amongst the feed water, and so heat it. The feed water from the hotwell enters at C.W. and the steam from the evaporator at S.M.

The internal pipe is made with slots set so as to cause the steam to have a circular motion, which causes it to be condensed

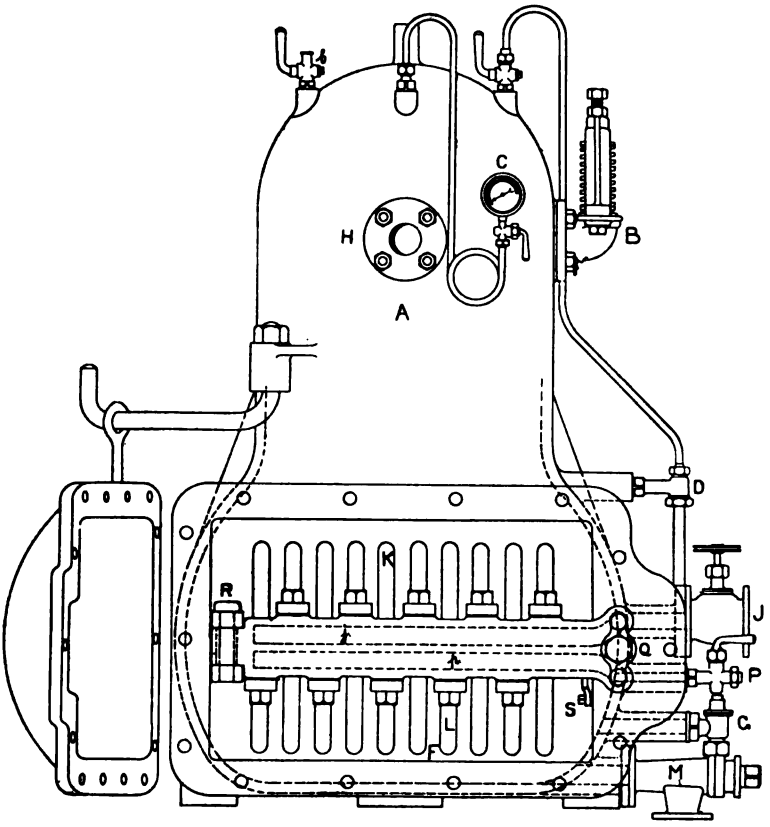

FIG. 5.

in the water. The hot water then flows out of the vessel at H.W. to the feed pumps, and any vapour or air freed in the heater is liberated at A.O. and passed to the hotwell.

HOCKING'S EVAPORATOR.

This evaporator has the coils supported from the door. The steam is taken from a valve on the evaporator through a port

in the joint to a coincident port in the door and so to the horizontal stems which form the steam inlet.

The drain is taken away in a similar manner. The coils are supported vertically by the stems which pass through the door, which stems are secured outside by capped nuts. By this means no scale may be allowed to accumulate on the connections, which must be removed for cleaning coils. The coils themselves are secured to the stems by capped nuts, so preventing any trouble due to scale or corrosion of the screw threads.

The door and coils are run out on rollers which run on a hinged bar, the lower projecting roller keeping the coils vertical.

Niemeyer's Evaporator.

In the Niemeyer evaporator the heating surface is divided into two or three parts, each part being supported by a separate trunnion on the bottom of the casting and through which the steam and drain are taken. Thus for cleaning it is only necessary to take off the outer door and then swing out the coils without breaking any joints. This has a disadvantage in that it requires a considerable number of union joints in the water space, which may give trouble due to deposition of scale on the screw threads.

North-Eastern Evaporator.

These evaporators are manufactured by the North-Eastern Marine Engineering Company at their Sunderland Engine Works and are now being made of a vertical type. The chamber containing the coils is cubical in shape and is surmounted by a cylindrical portion, which in turn is surmounted by a hemispherical top forming the steam-dome (Plate XXVIII., Fig. 1).

The heating surface is composed of solid drawn copper pipes in the form of horizontal coils. The coils are supported by two brass stand-pipes, one forming the steam inlet and the other the drain. In the smallest sizes the steam is passed by a single inner coil from the inlet steam-pipe up through the lower portion of the evaporator, coming down by the outer coil to the drain.

In larger sizes two and three coils are used for taking the steam from the inlet-pipe and the same back to the drain, making in all six coils for distribution of heat in the largest sizes.

The stand-pipes are of brass, having facings on their upper sides for carrying the coils, and are supported by long bolts passing through a small door on the side. This door, which is oval in shape, is cast hollow, with a division in the centre, so that one half is for steam and the other for drain. The bolts, where passing from the brass stand-pipe to the door, are circular in cross-section but have their sides cut so as to allow the steam to enter the door.

The bolts are fastened to the door by outside nuts and at the inside end the stand-pipes are secured by brass capped nuts, thus preventing any trouble due to scale collecting on the screw threads. A rib is cast on the brass pipe to rest on the bottom of the casting and so help to sustain the weight of the coils.

A large door is fitted on one side, and for cleaning the coils it is only necessary to remove this door, take off the capped nuts, and the coils may be drawn out on the bolts.

Joints are made between the brass nut and stand-pipe and small door by Taylor's corrugated rings, so no trouble is experienced in keeping the joints tight. These coils have been tested by putting on full boiler pressure with the large door removed and no signs of leakage were noticeable. A lug is provided for lifting the door and handling gear connected to a bar supported from the upper part of the casting. The usual mountings are fitted.

This evaporator is also made with the steam-dome cast separate. In this case the dome is almost spherical in shape and is bolted on to the lower casting. The door is made in a dished-out shape, so that when it is removed the coils project beyond the face of the main body and are thus more easily cleaned. A beam carrying a traveller is fitted in the top of the lower chamber, which enables the coils to be run out. When the traveller has been run out the full distance, the brass stand-pipes are then clear of the supporting bolts, and the coils may be revolved and so completely cleaned without being taken out of the evaporator.

The evaporator is fed by a small pump worked from the main engine pump levers, which pump has suction and discharge valves for regulating the feed. The evaporator is usually worked at a few pounds above the atmosphere and so blows direct.

It is usual to place the evaporator in the ship with the large door looking aft and the small door forward.

Quiggin's Evaporator (Plate XXVIII., Fig. 2).

This evaporator has a cast-iron body with a separate cast-iron cylindrical dome. The heating surface is composed of coils arranged vertically between inlet and outlet pipes. These pipes are tied together and are attached to the front of the main body. The coils, which are attached to the pipes by unions, are usually six in number, arranged in two rows, so that only the width of two is required for withdrawing and thus a smaller door may be fitted.

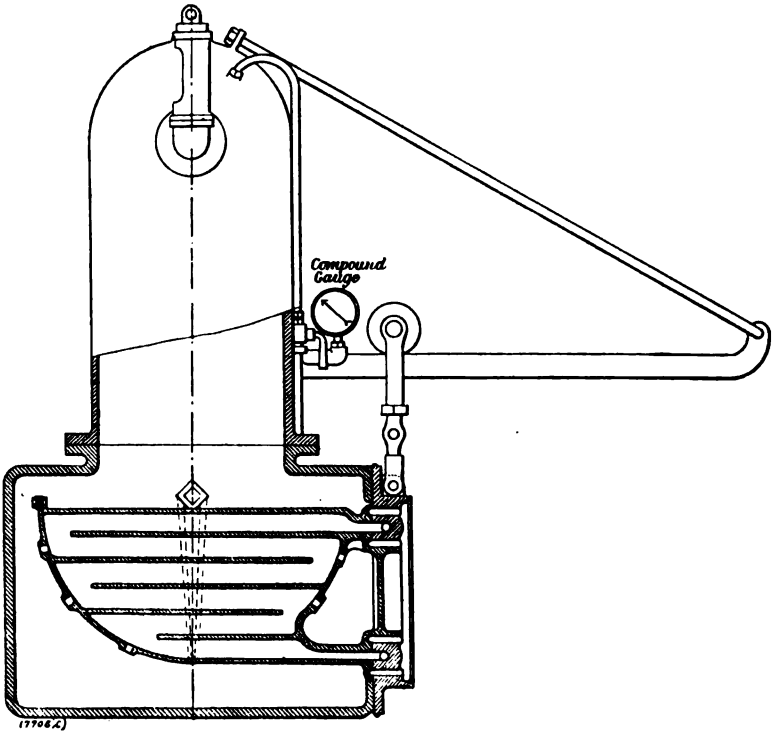

Fig. 6.

A projecting piece is cast on the bottom or outlet pipe, which slides on a bar attached to the bottom of the casting, and a lug is cast on the inlet end by which the coils mav be drawn out with the handling gear. Baffle plates are fitted in the top to prevent priming.

The inlet feed water passes through a special feed-water regulator. In this a float in the water actuates a small pilot valve, which in turn controls the motion of the main feed check valve, so that the water level is kept constant.

The Radio-Mundal Evaporator.

This evaporator, manufactured by Messrs. Willcox Bros., of Sunderland, is of entirely novel form. It has been designed to overcome the objection of having to open out the evaporator for the purpose of cleaning.

The heating surface (see Fig. 6), instead of being formed of coils, consists of gunmetal castings with flat parallel sides, stayed together by internal ribs, which are arranged to form a continuous passage from the inlet to the outlet. The

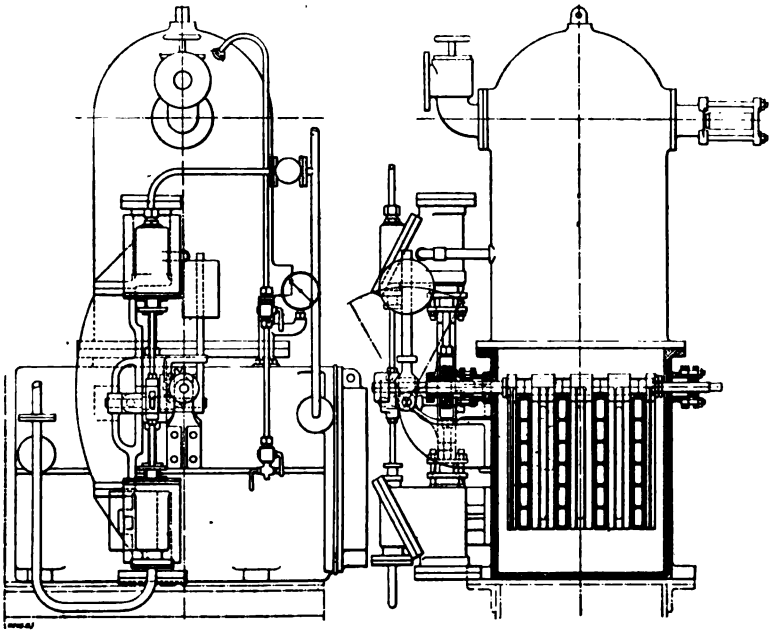

Fig. 7.

heaters, of which a number are fitted in each evaporator, are attached to the door and are set vertically with a space between each pair.

In this space (see Fig. 7) flat scrapers of Bull's metal are fitted which are capable of being revolved through half a revolution by a horizontal shaft passing through glands to the outside of the machine. A handle is fitted on the end of this shaft, and by revolving this handle through half a revolution the scrapers scrape the sides of the heaters and so prevent

the formation of scale. An adjusting screw is fitted so that the scrapers may be made to act on either side of the heaters. The steam and drain mountings are put on the body of the evaporator and connected to the hollow door by coincident ports, and thus to the heaters. By this means it is only necessary to break one joint, that of the door, when opening for inspection. It is claimed that a smaller evaporator may be fitted of this type than of others, as owing to the higher efficiency of the heating surface, more water may be evaporated.

When an independent pump is fitted to feed the evaporator, a rack-and-sector wheel-gear may be fitted from the pump rod to work the scrapers and the valve motion arranged so as to move the scrapers hard against the surfaces of the heaters. In this way, on the downstroke one surface is scraped, and on the upstroke the other.

Comparison of Different Types.

Having passed in review a number of the more important types, it will be seen that the most important point appears to be the method of attaching the coils. The first method, that of attaching the coils to the door and also putting the steam and drain valves on the door, has a disadvantage in that the joints of the steam and drain connections must be broken when the coils are to be taken out for cleaning. This has been overcome, as in the Caird & Rayner and Hocking types, by putting the valves on the main body and connecting by coincident ports, which come together when the door is put on and form a continuous passage. The weight of the combined coils and door may become considerable in the larger sizes and be inconvenient in handling. This type also has the disadvantage that boiler steam cannot be put on the coils whilst they are outside to test for leakage.

The other method of attaching the coils to some part of the main body seems to have been used oftener. This has the advantage of being able to test with the full boiler pressure steam when the large door is removed; but before the coils may be taken out, either swung out, or lifted, fresh joints must be broken. In some cases the whole of the coils come out together, as in the Weir, Morison and North-Eastern types, whilst in others each coil is connected separately, as in the Kirkaldy and Caird & Rayner.

The method of attaching the coils to trunnions, so as not to have to break any joints on the coils, has a distinct advantage and has been used by several makers, but it also has one disadvantage, which is that scale may be formed on the unions and trunnions and so make them unworkable.

When evaporators are fitted under Board of Trade inspection, as in passenger ships, safety valves of the same type as fitted to the boilers must be fitted and the size of the steam inlet must be proportional to the size of the safety valves: that is, the ratio of the area of steam inlet to the area of the safety valves must be not greater than the ratio of the relative volume of 1 lb. steam at boiler pressure to the relative volume of 1 lb. steam at the pressure at which the safety valves are set to blow off. This ensures that no accumulation of pressure can take place when the steam is full open, assuming that all the heat is passed from the steam to the water.

Evaporators as Winch Condensers.

Evaporators are sometimes fitted so that they can be used as winch condensers when in port. As the surface required is usually greater than what is fitted in an evaporator, it is usual to fit an extra set of coils in the steam space. When working as an evaporator, the lower coils only are used, but for a condenser the whole of the coils are required. This extra amount of surface is also of use if the evaporator is required to be forced, for if steam be put on the upper coils when the water is violently boiling it will vaporise any water which may be carried up with the steam.

The Evaporator in the Navy.

Up to the present I have only dealt with evaporators as supplied to ships of the mercantile marine, but I wish to refer to the arrangement usually fitted in the Navy. Since the introduction of the closed exhaust system, the evaporators have been worked with low-pressure steam in the coils and a pressure below the atmosphere in the shell. The evaporators supplied by Messrs. Weir for war vessels are of a lighter design than those for the merchant service.

The lower generating chamber is cast entirely of gunmetal and the steam-dome is built up of galvanised steel boiler-plates.

In some of the latest battleships and cruisers the evaporator coils are attached to the stand-pipes by ground cone couplings, thus permitting the easy removal of each coil separately for cleaning. Since the pressure in the shell is below the atmosphere, the brine cannot be blown out to keep down the density, so arrangements have to be made for pumping out the brine. This is done by a combination feed-and-brine pump working together with a vessel for diluting and cooling the brine. The water end of the pump consists of two separate single plunger pumps, the larger for the feed and the smaller for the brine. Connected with the steam-valve lever is an arrangement for opening a valve which admits feed water to a cooling chamber, where it mixes with the hot brine. This valve is so arranged that it can be opened at any part of the stroke, and so the feed water is discharged to the evaporator during part of the stroke and to the cooling chamber during the rest.

An index is fitted on the gear to show the ratio of the brine withdrawn to the total feed, and from a table the equivalent density in the evaporator may be found. A feed-controller on the float principle is fitted to keep the level constant.

It is usual practice in the Navy to fit evaporators in conjunction with distilling condensers, to give a supply of pure drinking water.

The following illustrations were also shown:—Weir's first form of evaporator; Weir's present form of evaporator; Caird & Rayner's evaporator, coils attached to door; Caird & Rayner's evaporator, coils separate from door; Kirkaldy's evaporator; equilibrium vapour valve; automatic feed and overflow valve; Morison's radial evaporator; evaporator feed heater; Hocking's evaporator; North-Eastern evaporator; evaporators and distillers for H.M.S. "Challenger."

To illustrate Mr. C. Schofield's Paper on "Pneumatic Tools as applied to Ship Construction and their Advantages to Ship Builders & Engineers."

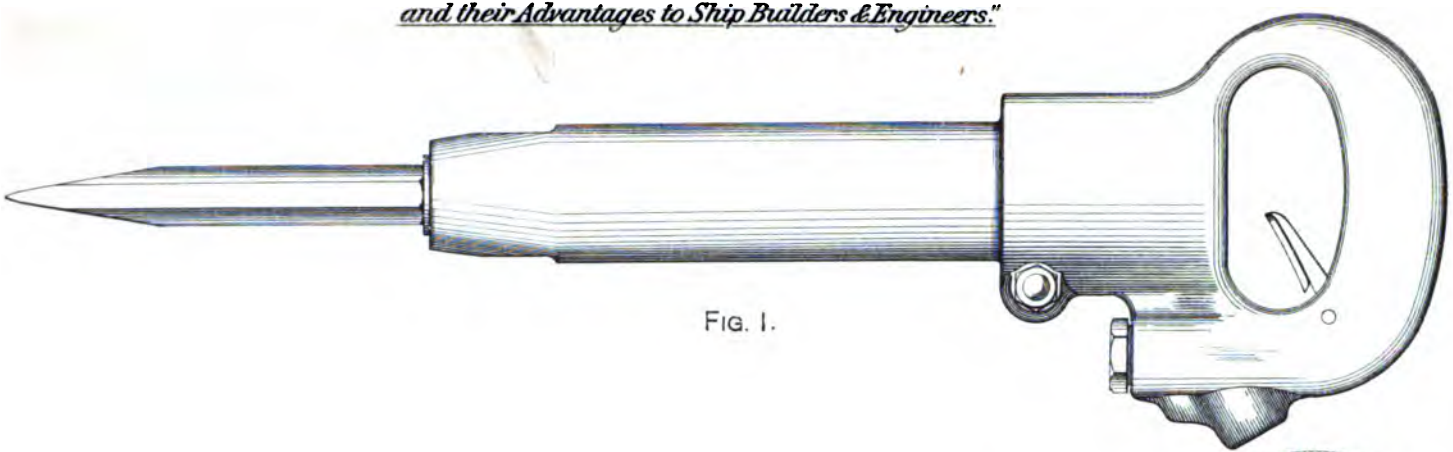

Fig. 1.

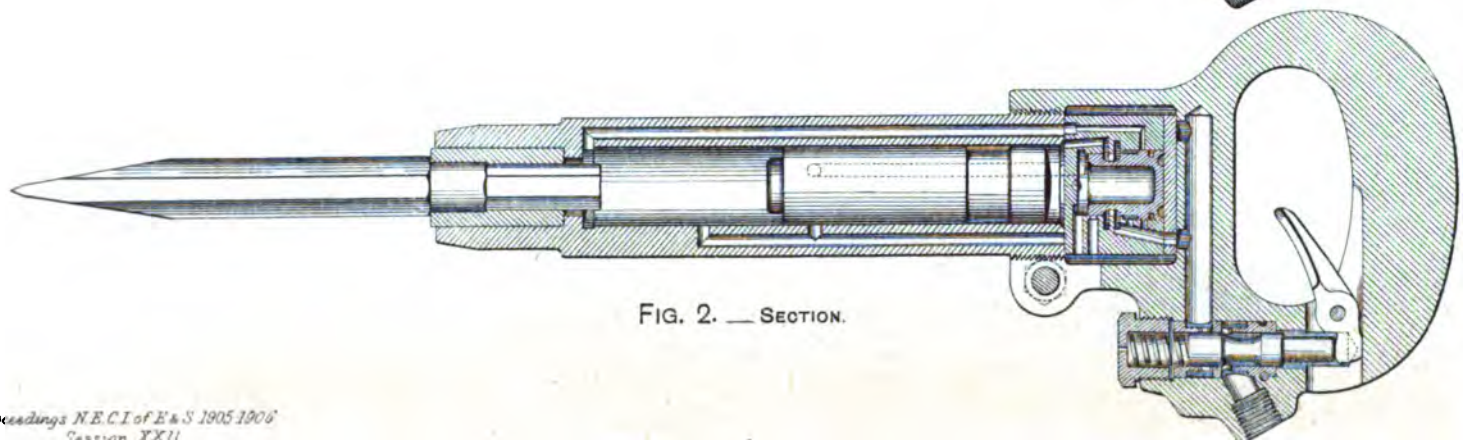

Fig. 2. — Section.

Andr. Reid & Comp.y L.td Newcastle upon Tyne

PRESENTATION TO THE SECRETARY.

The CHAIRMAN (Mr. J. R. Fothergill) said—I have now to call upon Mr. Boyd to perform a very pleasant undertaking in regard to which not only he, but all the members present, will be gratified. Mr. Boyd, you all know, is the "father" of the Institution. I think it is the greatest compliment that could be paid our Secretary that Mr. Boyd should have taken, I will not say the trouble, but the pleasure, of coming here to-night to make this presentation to him. I will now ask Mr. Boyd to be kind enough to make this presentation to Mr. Duckitt.

Mr. WILLIAM BOYD said—I feel some difficulty in discharging the duty which has been imposed upon me this evening to my own satisfaction and to yours. The movement which has resulted in this gathering here to-night, and in the presentation which I am asked to make Mr. Duckitt, originated amongst a few of his friends in the autumn of last year, and there was some idea of presenting this testimonial to him at an earlier date, but other things came in the way, and it was then decided to defer it for a time. At that time I was asked to become the chairman of the committee upon which fell the duty of soliciting subscriptions, and, feeling that I could yield to no one in my knowledge and experience of Mr. Duckitt's services in the early days of the Institution, it afforded me very great pleasure to accede to that suggestion. Those of us who remember Mr. Duckitt's work some twenty-one years ago know very well the great amount of labour and trouble that he took in getting the affairs of the Institution into working order. It may be within the recollection of most of you that the first Secretary of this Institution was my friend Mr. W. G. Spence. He served us in the capacity of honorary secretary for practically the first twelve months after the foundation of the Institution, but in the summer of 1885—it sounds a long way back—Mr. Spence found his private work so great, and the work of the Institution growing so fast, that it was necessary to employ a permanent secretary. In July of that year Mr. Duckitt was appointed, and

sentative for the Northern Division of Hartlepool. In 1895 he was elected member of Parliament for the Hartlepools, which seat he held till the general election in 1900, when he was defeated by Sir Christopher Furness.

On the occasion of her late Majesty's Diamond Jubilee (1897), Sir Thomas was knighted as a recognition of the value of his work in varied spheres of activity. In October of the same year he was made a freeman of the borough, and in the illuminated address which accompanied it, allusion was made to his "consistency in the pursuance of municipal good government," and his "evenness of temper under all circumstances and cordiality of manner."

Sir Thomas took a keen interest in the welfare of friendly societies. He was trustee and governor of the Hartlepools Hospital, a vice-president of the Cameron Memorial Hospital, West Hartlepool, and a representative of the Board of Trade on the Port and Harbour Commission. In addition to holding the office of vice-chairman of Richardsons, Westgarth & Co., Ltd., he was chairman of the Manchester and Salford Shipping Co., Ltd., and also of the High Speed Stamp Co., Ltd., and a director of the Northern Counties Electrical Supply Company. He was a deputy-lieutenant for the county of Durham, a magistrate of the county, and also of the borough of Hartlepool, a member of the Council of the Institution of Mechanical Engineers, a member of the Institution of Naval Architects, and a Fellow of the Statistical Society. He was also chairman of the Tees and Hartlepool Engineering Trades Employers' Association from its formation; vice-chairman of the North-East Coast Engineering Trades Employers' Association; also a member of the Emergency and Finance Committees of the Engineering Employers' Federation.

He joined the North-East Coast Institution of Engineers and Shipbuilders in 1888, and in 1894 he was elected President, which office he held for two years. His kind and genial manner and his devotedness to the duties of the office won for him the admiration and esteem of all the members.

Sir Thomas had been ill for about a month, and a week before his decease his condition became so critical that an operation was considered necessary. This was successfully performed and hopes were entertained of his recovery, but a

relapse took place from which he never rallied. He died on 22nd May, 1906.

He leaves a widow, Lady Richardson, daughter of the late Rev. John Cooke Faber, rector of Chichlade, Wiltshire, and a family of seven sons and two daughters.

MR. ALEXANDER TAYLOR.

Mr. ALEXANDER TAYLOR, who was the younger son of Mr. William Taylor, of Tweedmouth, was born on the 8th of March, 1844.

In 1860 he entered the works of Mr. George Clark, engine-builders, of Sunderland, as an apprentice, after which he was employed at Messrs. Thomas Richardson & Sons (now Messrs. Richardsons, Westgarth & Co.), Hartlepool. In January, 1870, he was appointed works manager to Messrs. T. Clark & Co., Elswick Marine Engine Works, Newcastle-upon-Tyne. He commenced business on his own account at Newcastle-upon-Tyne, as consulting engineer, in April, 1872, and soon built up a large and lucrative practice.

He joined the North-East Coast Institution of Engineers and Shipbuilders at its inauguration in 1884, and was elected an ordinary member of Council. In 1886 he was elected a Vice-President, and from that date up to 1895 when he retired, he occupied a seat in the Council either as Vice-President or ordinary member of Council but he continued a member of the Institution up to the time of his death.

He served on many of the sub-committees and took considerable interest in the general business of the Institution.

In December, 1885, a sub-committee of seven members was appointed by the Council of the Institution "to investigate and endeavour to formulate a simple but comprehensive rule or measure of the power of marine engines and boilers, which being in a measure scientifically sound and commercially convenient, shall be applicable to the various types and proportions which may obtain in practice." The Committee appointed were Messrs. W. J. Clark, of Sunderland (chairman), J. Brockat (Lloyd's Register), J. H. Irwin, F. C. Marshall, B. G. Nichol, Alex. Taylor and R. L. Weighton. Shortly after the formation of the Committee, Mr. W. J. Clark had to retire on account of ill-

health and Mr. J. Brockat was removed by death. Mr. William Boyd was then appointed chairman and the late Mr. W. Kilvington was appointed to fill Mr. Brockat's place. The labours of this Committee extended over a period of about three years. Mr. Alexander Taylor was an ardent worker and the decisions of the Committee were eventually brought before the Institution in a paper, read in 1890, by Prof. R. L. Weighton, entitled "The Normal Indicated Horse-power of Marine Engines."

He was particularly identified with the introduction and success of the triple-expansion engine, and in 1885, he read a paper before the North-East Coast Institution on "Triple Expansion Engines." He invented a particular form of pontoon dock, and in 1888 he read a paper before the Institution on "Pontoon and Floating Docks." He was identified with the inception and directorate of the Tyne Pontoons and Dry Dock Co., Wallsend-on-Tyne, also the Manchester Pontoons Co., Manchester.

In 1890, Mr. Taylor, in conjunction with the late Mr. W. Kilvington, read another paper before the Institution on "Boiler Furnaces."

He also gave much attention to the stability and stowage of ships, and he invented a stability indicator for showing the initial stability and stowage of ships at any displacement. In the year 1884 he read a paper on this subject before the Institution of Naval Architects, of which he was likewise a member.

In his profession he was held in high esteem by his colleagues, and was always ready to give generous advice and assistance to any who approached him. Naturally he was of a retiring but at the same time genial disposition, and gained the goodwill and esteem of all who knew him.

Mr. Taylor practically retired from business about twelve years ago. He died on the 8th of February, 1906, in the 62nd year of his age, after an illness extending over several months.

MR. CONRAD WHITE.

Mr. Conrad White was the son of a surgeon widely known and esteemed in the district round Shotley Bridge. Mr. White began his career in Sunderland, where he served his time as a mechanical engineer in the old Bishopwearmouth Iron Works.

He afterwards spent some time at Messrs. George Black's Works, Southwick, Sunderland. Coming to Newcastle, he was, for many years, chief in the designing department of Messrs. Thompson, Boyd & Co.'s Spring Garden Engine Works, continuing there throughout a period marked by the evolution of the marine engine from its early form to its present triple-expansion type of construction. In 1873 he entered into partnership with Mr. Harry Gill, consulting engineer and the firm of Gill and White became widely known in the north-east district; but although still identified with it at the time of his death, he had for some years previous retired from active business practice.

Much of his leisure of late years was devoted to philanthropic work. He was a zealous member of committee, and supporter of the Blind Asylum. He was equally interested as a member of the Burial Board of St. Andrew's, and it was immediately after attending a meeting of this Board of which he was Chairman, on the 22nd of November, 1905, being then in his 70th year, that the seizure occurred, which terminated fatally in half an hour in the presence of his distressed colleagues. Up to this moment he had appeared to be in his ordinary good health and spirits.

Mr. White was a man of wide reading and culture, and a member of the Newcastle Society of Antiquaries. He joined the Institution of Engineers and Shipbuilders when it was formed in 1884, and though he took no active part in its affairs, still he was deeply interested in its proceedings. To his colleagues and to all who enjoyed the privilege of his friendship, he was endeared by his manly sincerity, his depth of sympathy, and his unfailing constancy.

MR. WILLIAM WHYTE.

Mr. William Whyte, who died at East Rigg, Corbridge, on June 15th, was a son of Captain Alexander Whyte, and was born at Rothesay, Bute, in 1837. After serving his time at Greenock, he entered the works established by Rankine for engineering graduates at Port Glasgow, and on the close of this experimental workshop, he left the Clyde and was engaged by Messrs. Penn, at Greenwich. Whilst there, an opening occurred in India and his services were transferred to Bombay, where he eventually became superintending engineer of a fleet

of cargo steamers trading on the Malabar coast. The transition to higher pressures had already begun, and Mr. Whyte returned to England to superintend vessels sent home to be "compounded." Leaving for India once more, he followed the success attained under the transformed conditions of working. About 1872 he became superintending engineer to Messrs. Watts, Milburn & Co., who were adding to their fleet an important class of vessels for the Eastern trade, represented by the "Hankow," "Whampoa," "St. Osyth," and others whose engines he superintended during construction. When a change was made in the firm, Mr. Whyte began a professional career on his own account and for many years acted as consulting and superintending engineer for several firms of shipowners. Latterly he developed a system of metallic packing, in the manufacture of which he became interested and in which he achieved a remarkable success. For the last few years, however, he had retired from business, living chiefly in his picturesque house overlooking the valley of the Tyne at Corbridge. Here, after a strenuous and eventful life, his abiding love of literature and of natural objects gave charm to his presence among a circle of attached friends. He was a member of the Institution of Naval Architects and joined this Institution at its inauguration in 1884.

NORTH-EAST COAST INSTITUTION OF ENGINEERS AND SHIPBUILDERS.

GRADUATE SECTION.

PRODUCER GAS AND ITS USES.

By W. H. WADDINGHAM. *

[Read before the Graduate Section of the Institution on October 31st, 1903.]

The use of gas for various purposes in connection with engineering has increased very rapidly within the last decade, and may now be said to be in the front rank as a means of generating power. It is now over one hundred years since gas was first applied to public illumination. Since then the manufacture of gas has increased, notwithstanding other systems of lighting, till the quantity of coal gasified is over 15 million tons per annum.

The first record of an attempt to obtain power from an explosive mixture of gas and air is dated as far back as 1678, and the idea was to explode gunpowder in a cylinder.

But the mechanical difficulties of obtaining continuous and regular explosion with such a substance as gunpowder proved too much for the engineers of that time and entirely stopped progress. Over a century later we find records of patents setting forth the use of an explosive mixture of gas and air. One patent describes an impulse turbine driven by the force obtained by the products of an exploded mixture impinging on

* Awarded books to the value of £3.

To illustrate Mr. C. Schofield's Paper on "Pneumatic Tools as applied to Ship Construction and their Advantages to Ship Builders & Engineers."

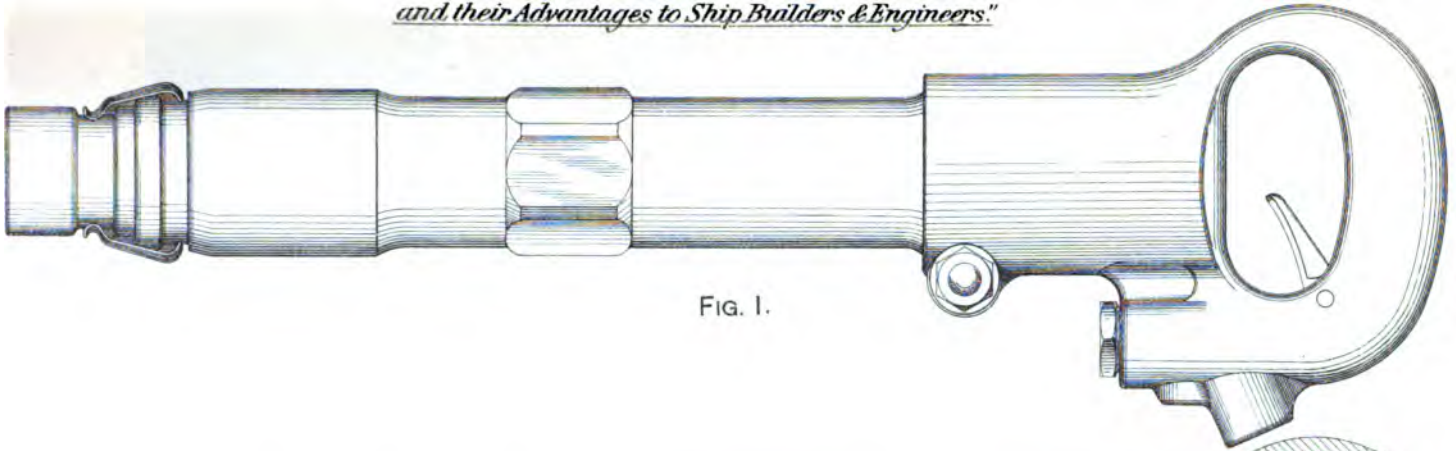

FIG. 1.

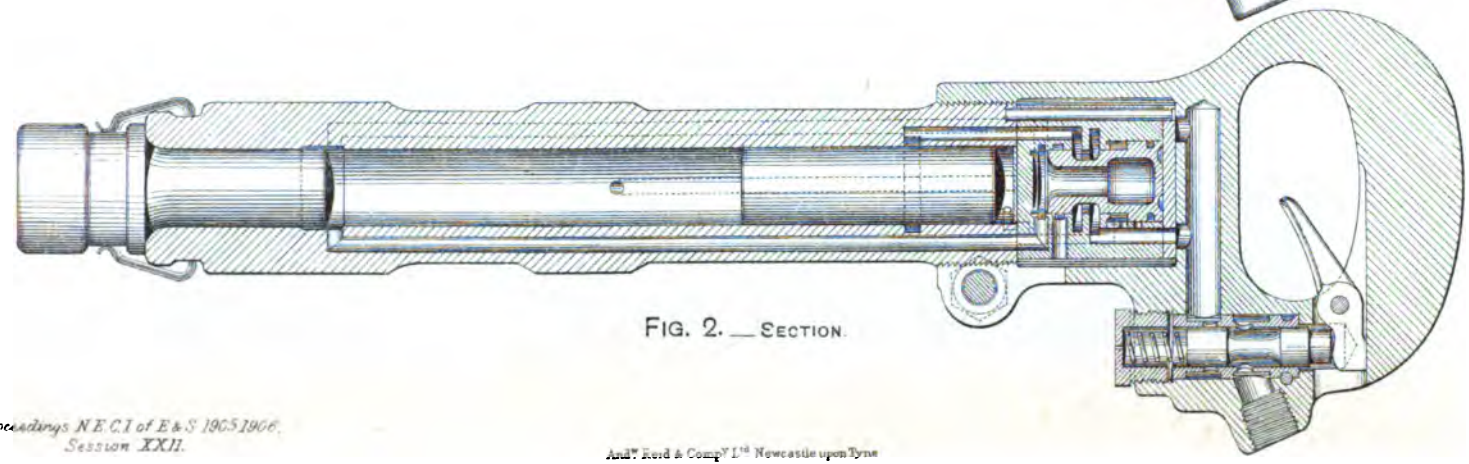

FIG. 2.—SECTION.

Proceedings N.E.C.I. of E. & S. 1905-1906.
Session XXII.

And.w Reid & Comp.y L.td Newcastle upon Tyne

To illustrate Mr. C. Schofield's Paper on "Pneumatic Tools as applied to Ship Construction," etc.

PNEUMATIC TOOLS WORKING.

To illustrate Mr. C. Schofield's Paper on "Pneumatic Tools as applied to Ship Construction," etc.

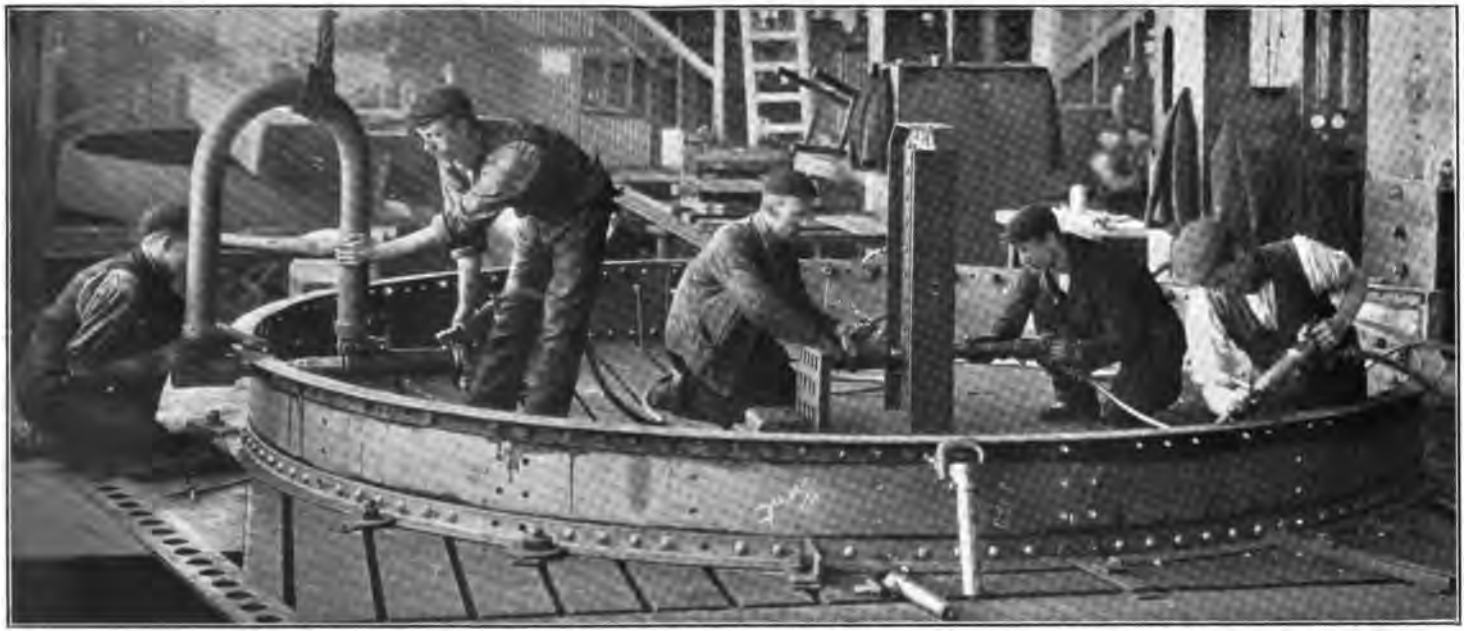

PNEUMATIC TOOLS WORKING.

eir Advantages to Ship Builders & Engineers."

NG.

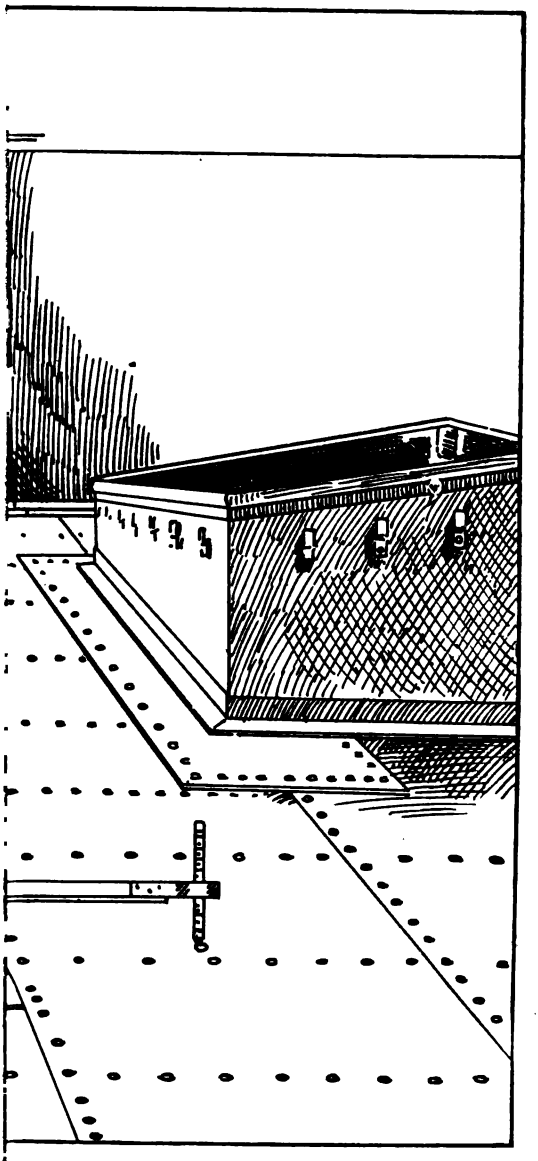

Pro

And^w Reid & Com.p^y Ld Newcastle upon Tyne

ir Advantages to Ship Builders & Engineers."

TING.

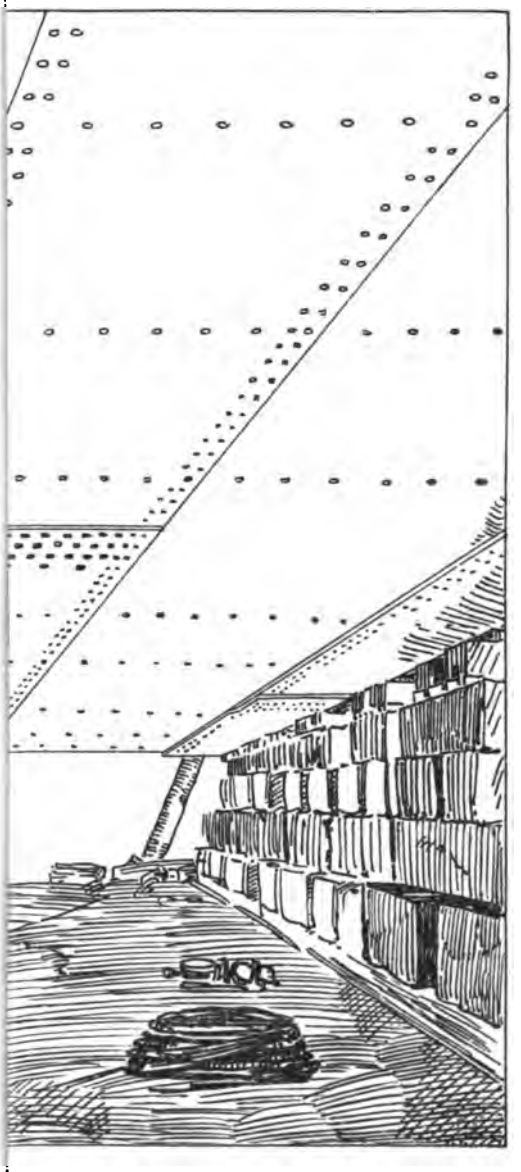

Proceed

And^w Reid & Comp^y L^td Newcastle upon Tyne

ir Advantages to Ship Builders & Engineers."

G.

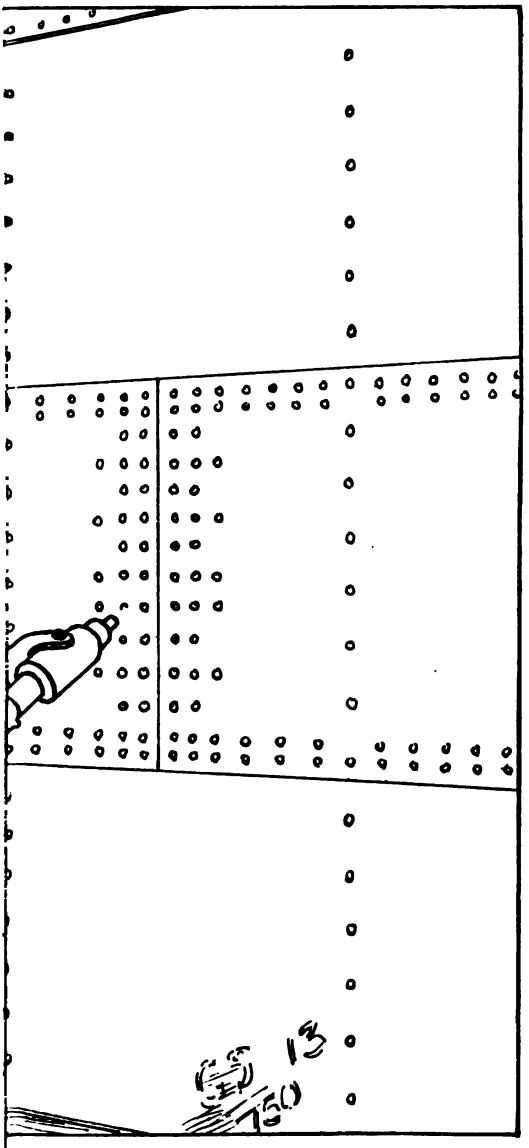

Proceedi

And.w Reid & Cor pY L.td Newcastle upon Tyne

To illustrate Mr. J. H. Heck's Remarks on Mr. C. Schofield's Paper on "Pneumatic Tools."

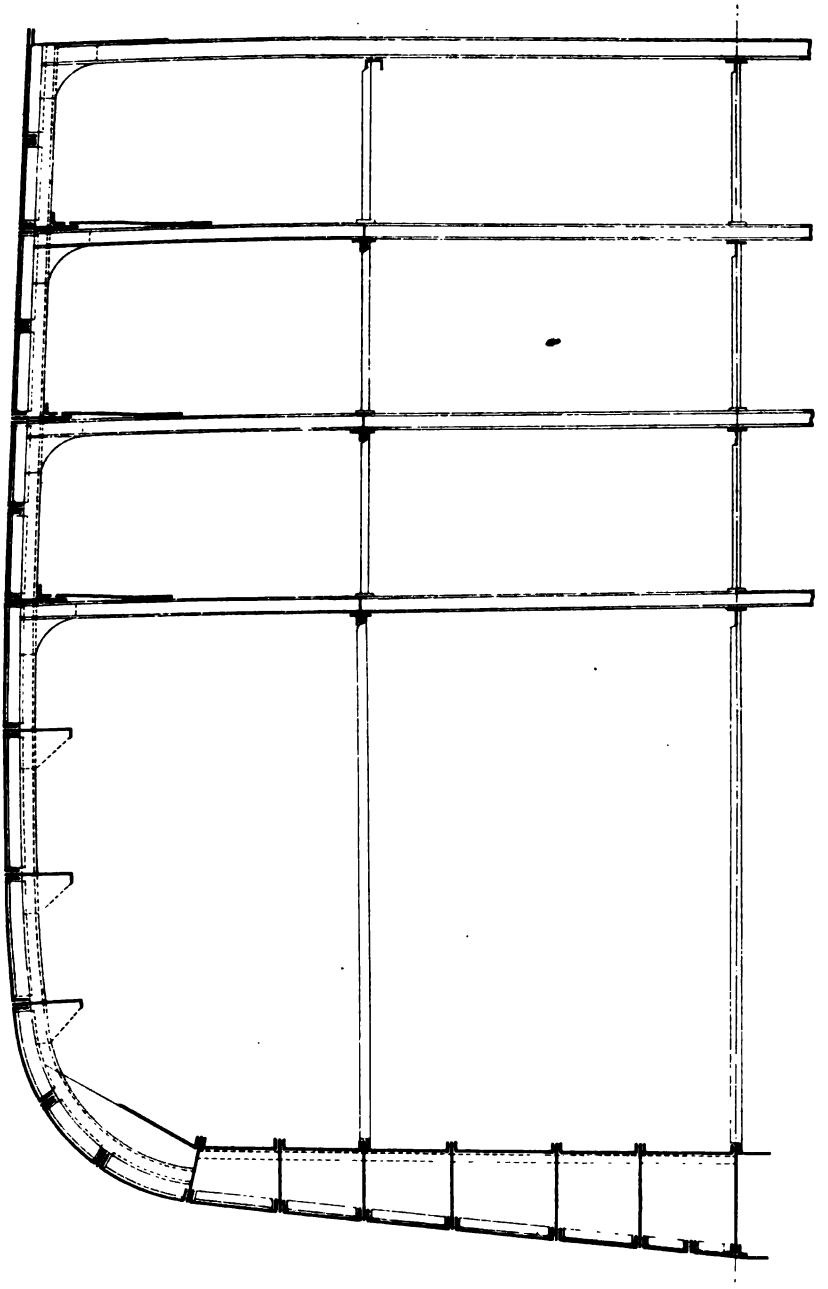

And^w Reid & Comp^y L^td Newcastle upon Tyne

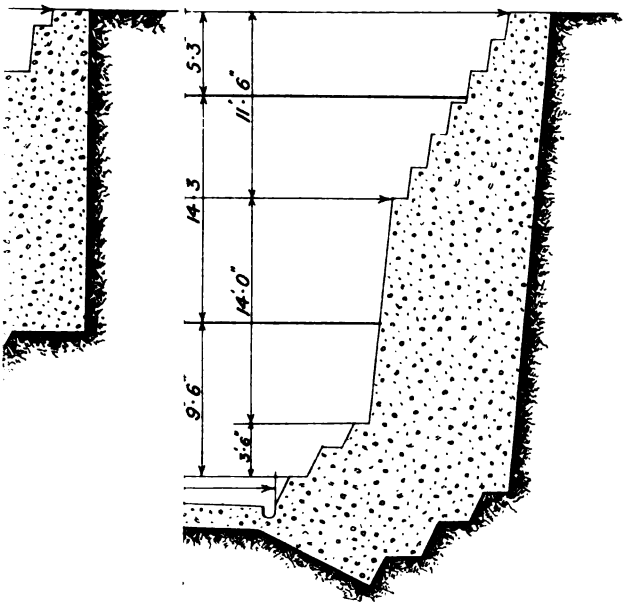

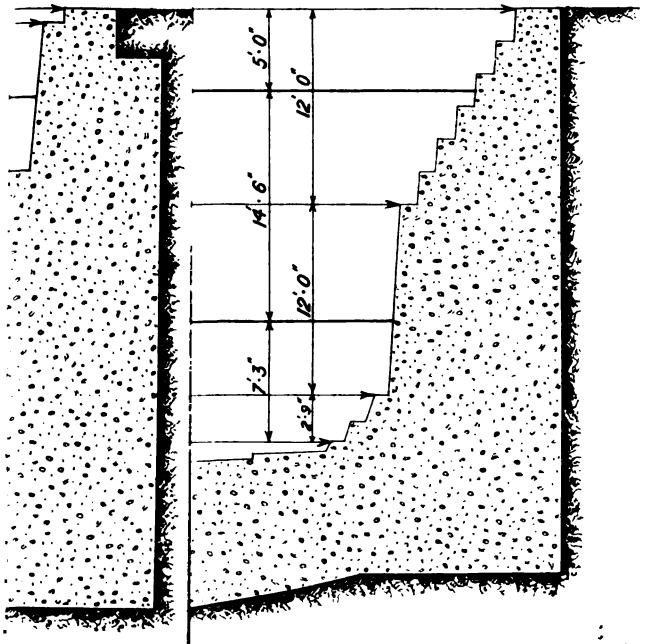

10

And.w Reid & Comp.y L.td Newcastle upon Tyne.

To illustrate Mr. J. Mitchell Moncrieff's Paper on "Commercial Dry Docks."

SECTION ON GREENHEART HOLLOW QUOIN.

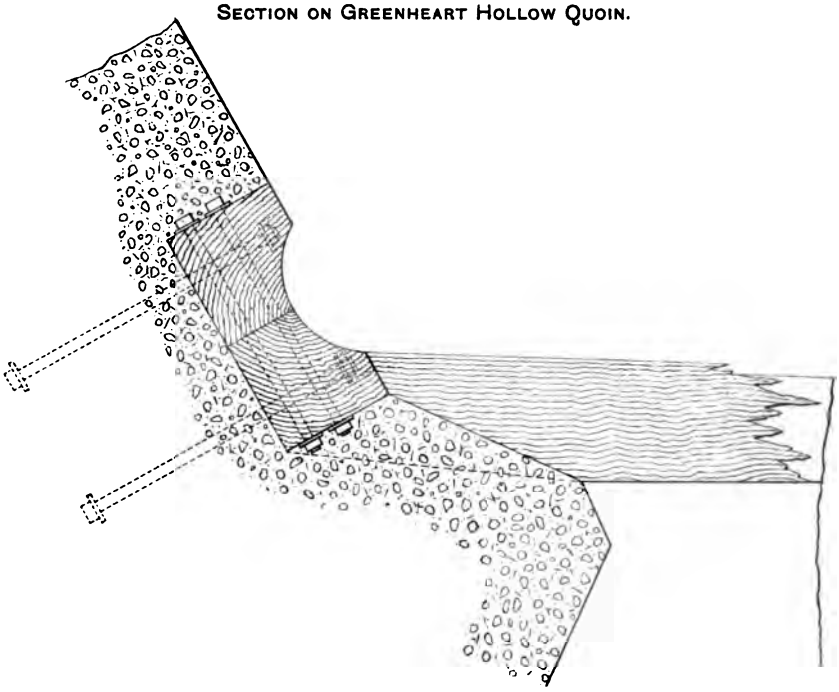

SECTION OF GREENHEART CLAPPING SILL.

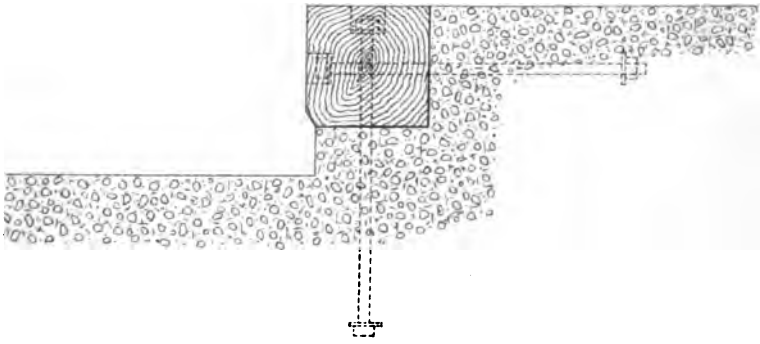

SCALE OF FEET AND INCHES.

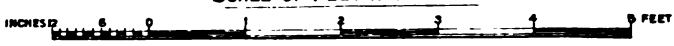

And.w Reid & Comp.y L.td Newcastle upon Tyne

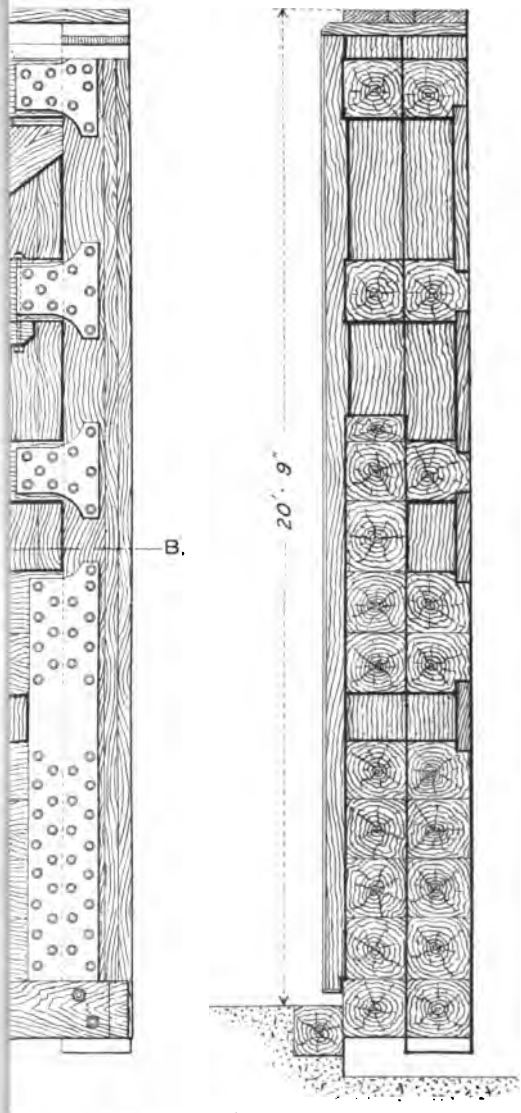

Vertical Section on Line C.D.

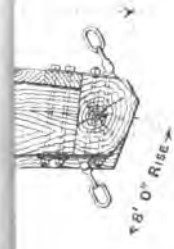

Proceed. 17 18 19 20 FEET.

And.w Reid & Comp.y L.td Newcastle upon Tyne.

To illustrate Mr. J. Mitchell Moncrieff's Paper on "Commercial Dry Docks."

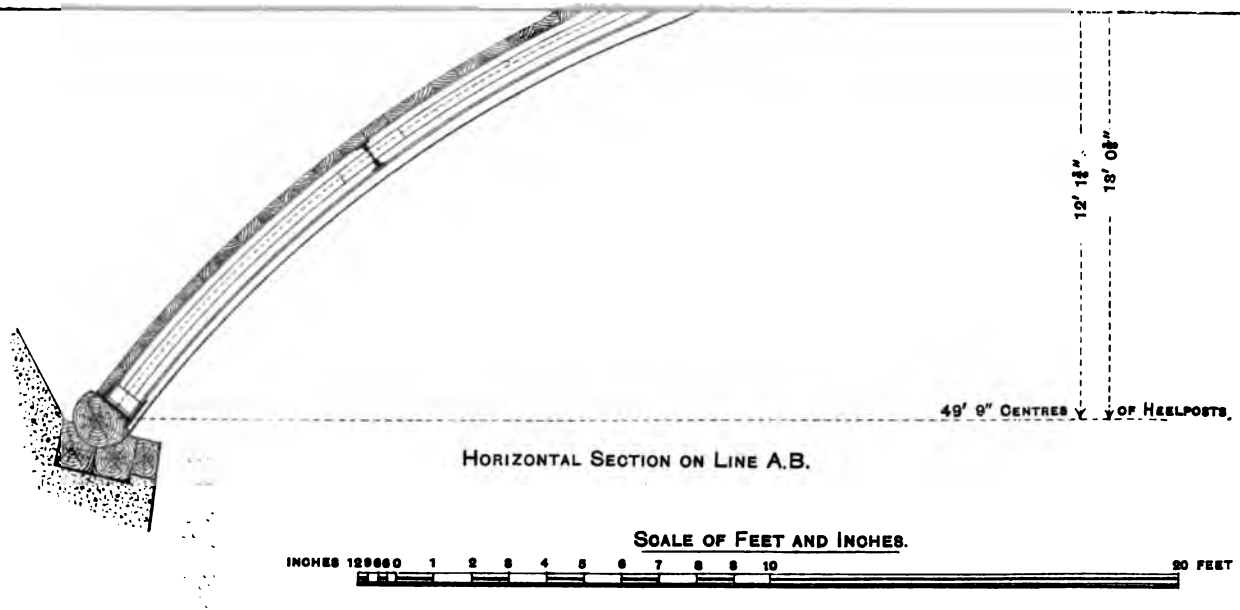

And.w Reid & Comp.y L.td Newcastle upon Tyne

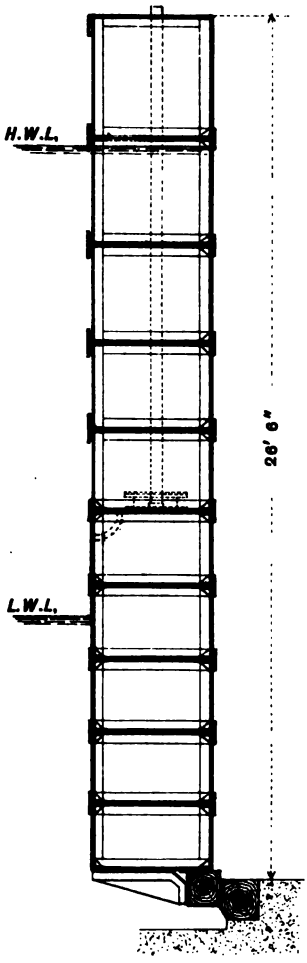

Vertical Section on Line C.D.

FEET

And.w Reid & Comp.y Ld. Newcastle upon Tyne

To illustrate Mr. J. Mitchell Moncrieff's Paper on "Commercial Dry Docks."

HEEL SOCKET AND PIN.

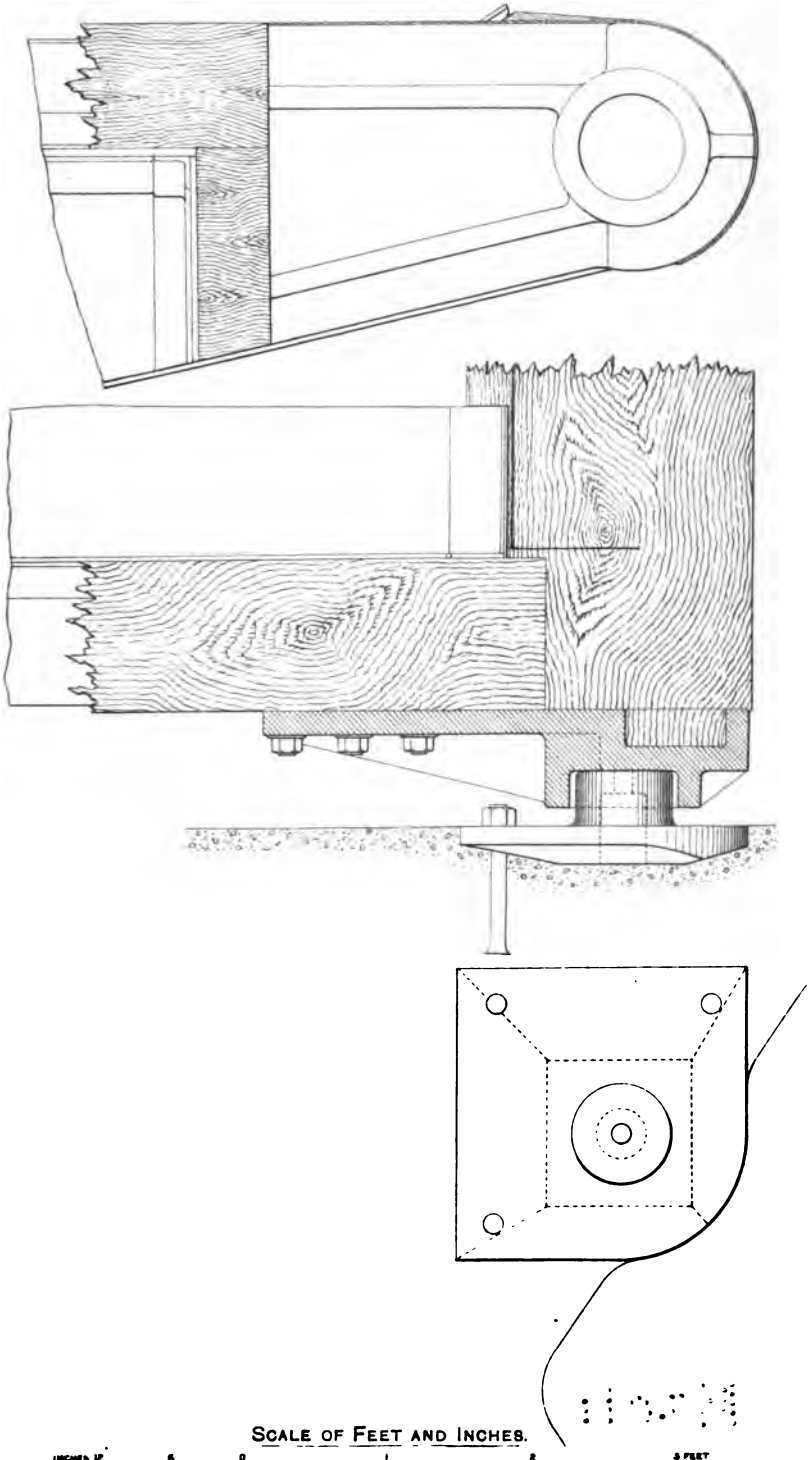

SCALE OF FEET AND INCHES.

And.w Reid & Comp.y L.td Newcastle upon Tyne

y Docks."

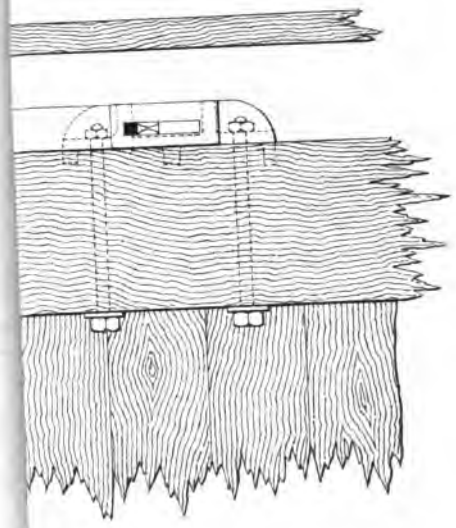

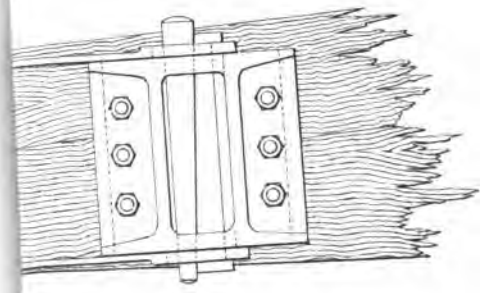

5 FEET

Proceedings

And.w Reid & Comp.y L.td Newcastle upon Tyne

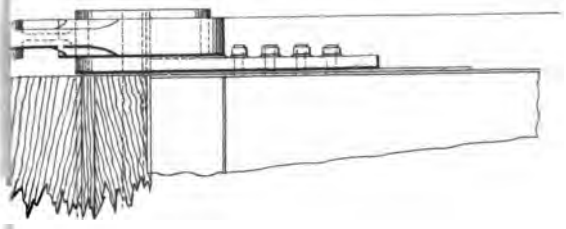

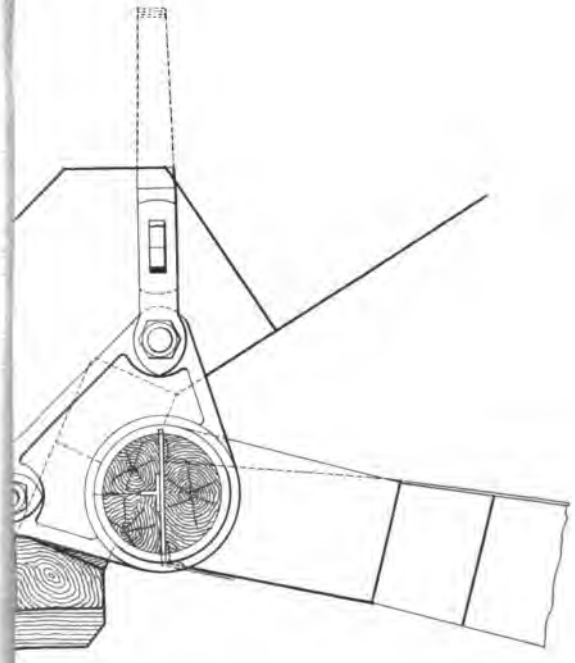

And.ᵗ Reid & Comp.ʸ Lᵗᵈ Newcastle upon Tyne

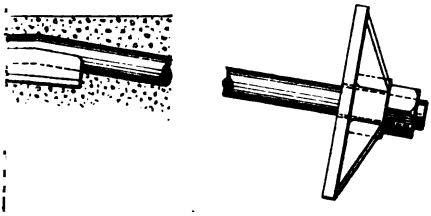

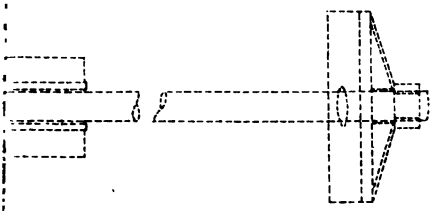

And.w Reid & Compy L.td Newcastle upon Tyne

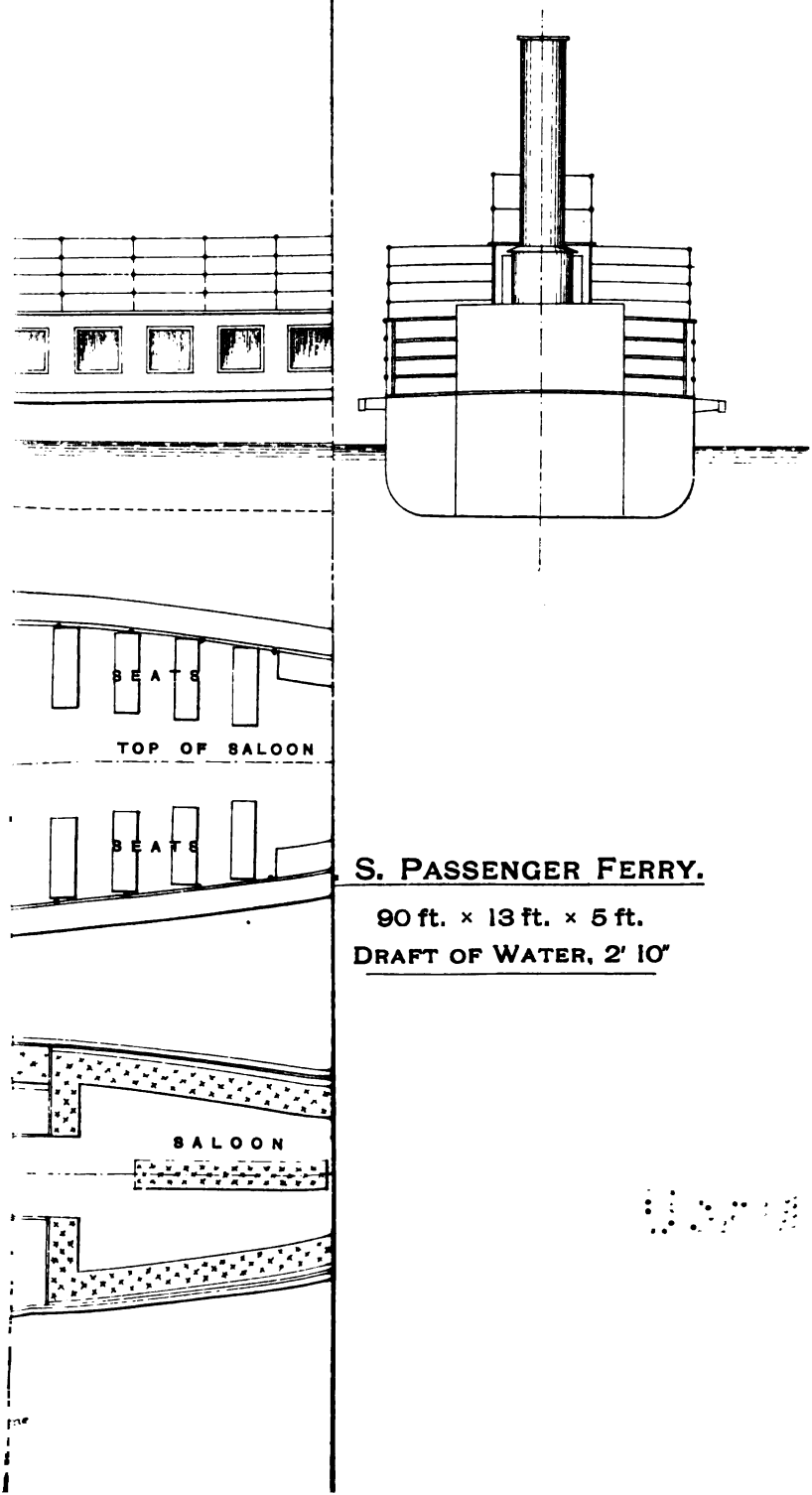

S. PASSENGER FERRY.

90 ft. × 13 ft. × 5 ft.

DRAFT OF WATER, 2' 10"

To illustrate Mr. F. H. Alexander's "Remarks upon Mr. Hogg's paper."

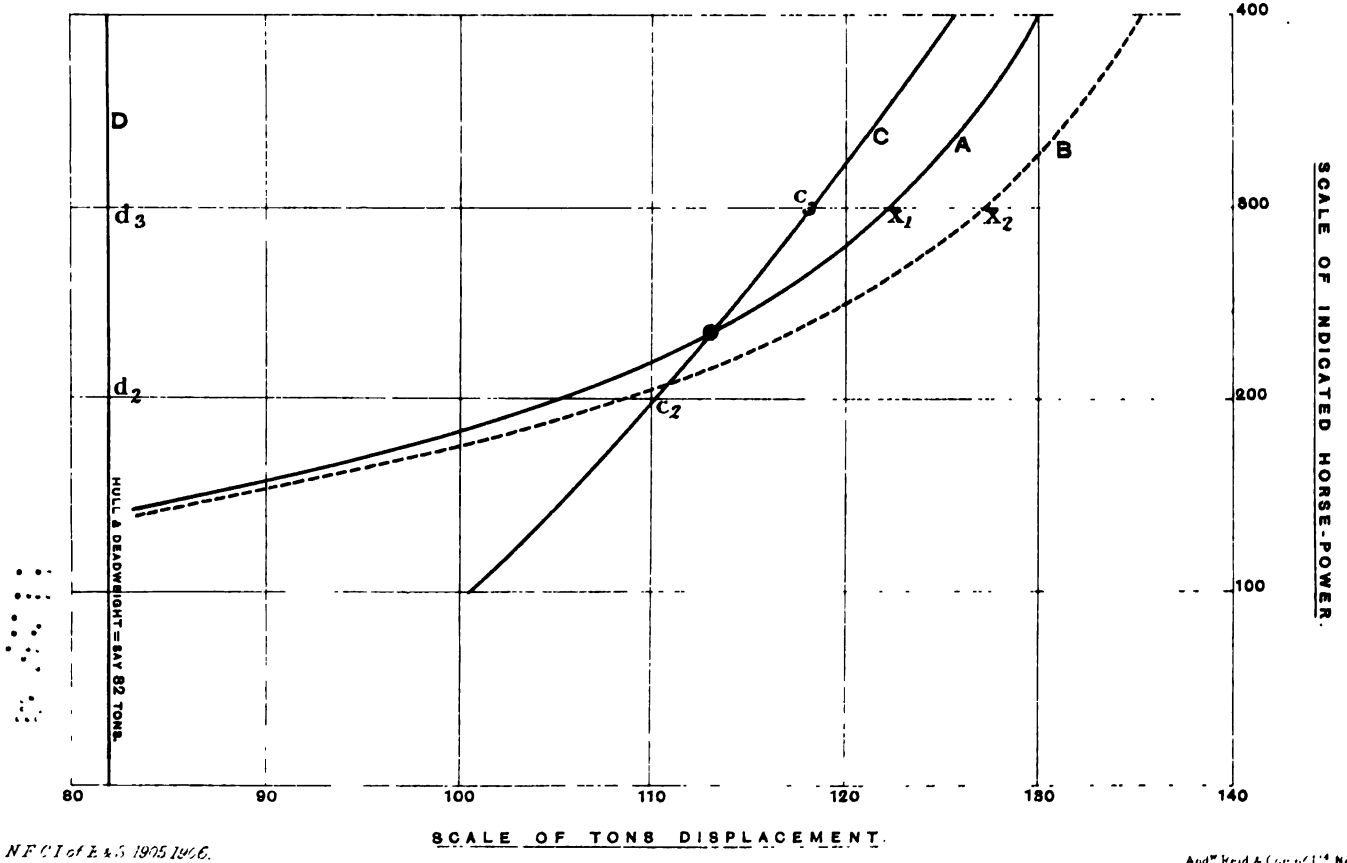

Transactions N.E.C.I. of E. & S. 1905 1906.
Vol. XXII.

Andw Reid & Co. p. Lt. Newcastle upon Tyne

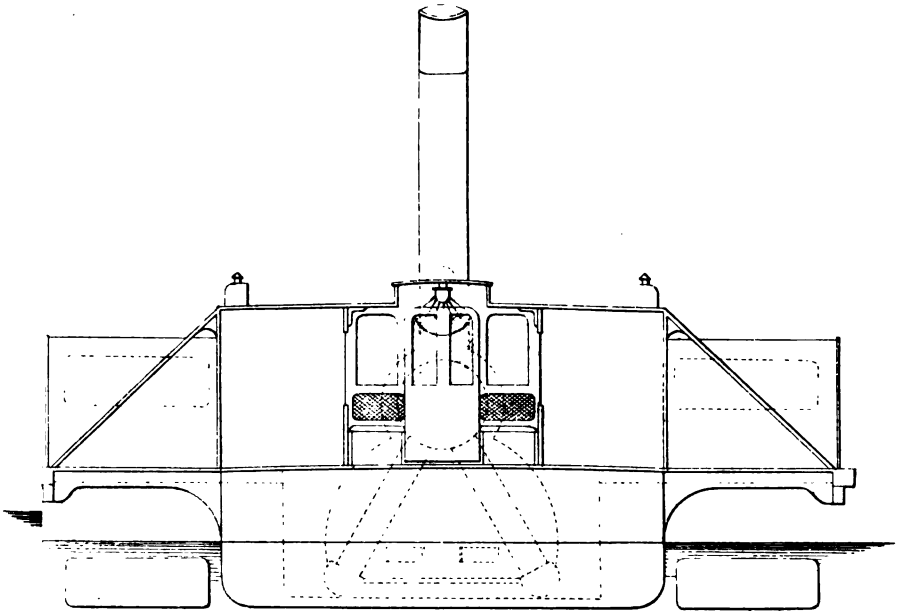

VER PASSENGER PADDLE STEAMER
ANTHRACITE COAL.

nents for No. 5 Form Steam Certificate to carry
out 500 Passengers.

11½ Knots = 13·25 Miles per Hour.

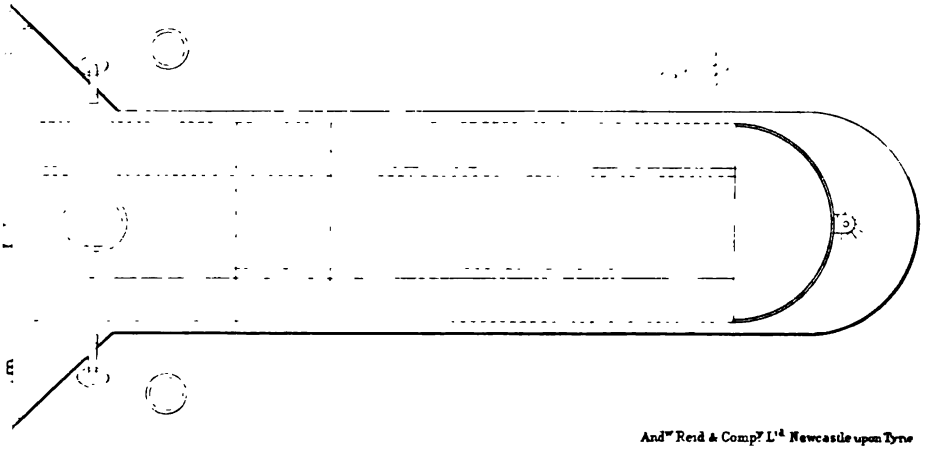

And^w Reid & Comp^y L^td Newcastle upon Tyne

Design for Thames River Passenger Screw Steamer to Burn Anthracite Coal.

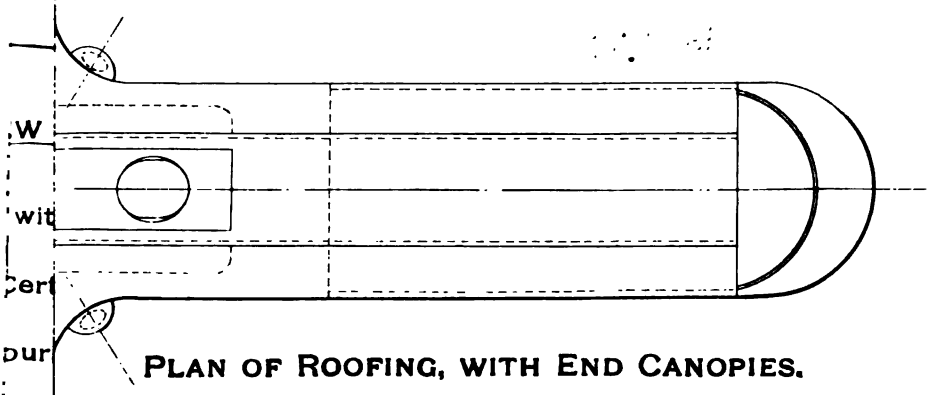

Plan of Roofing, with End Canopies.

And^w Reid & Comp^y L^td Newcastle upon Tyne

To illustrate Mr. W. H. Waddingham's Paper on "Producer Gas and its Uses."

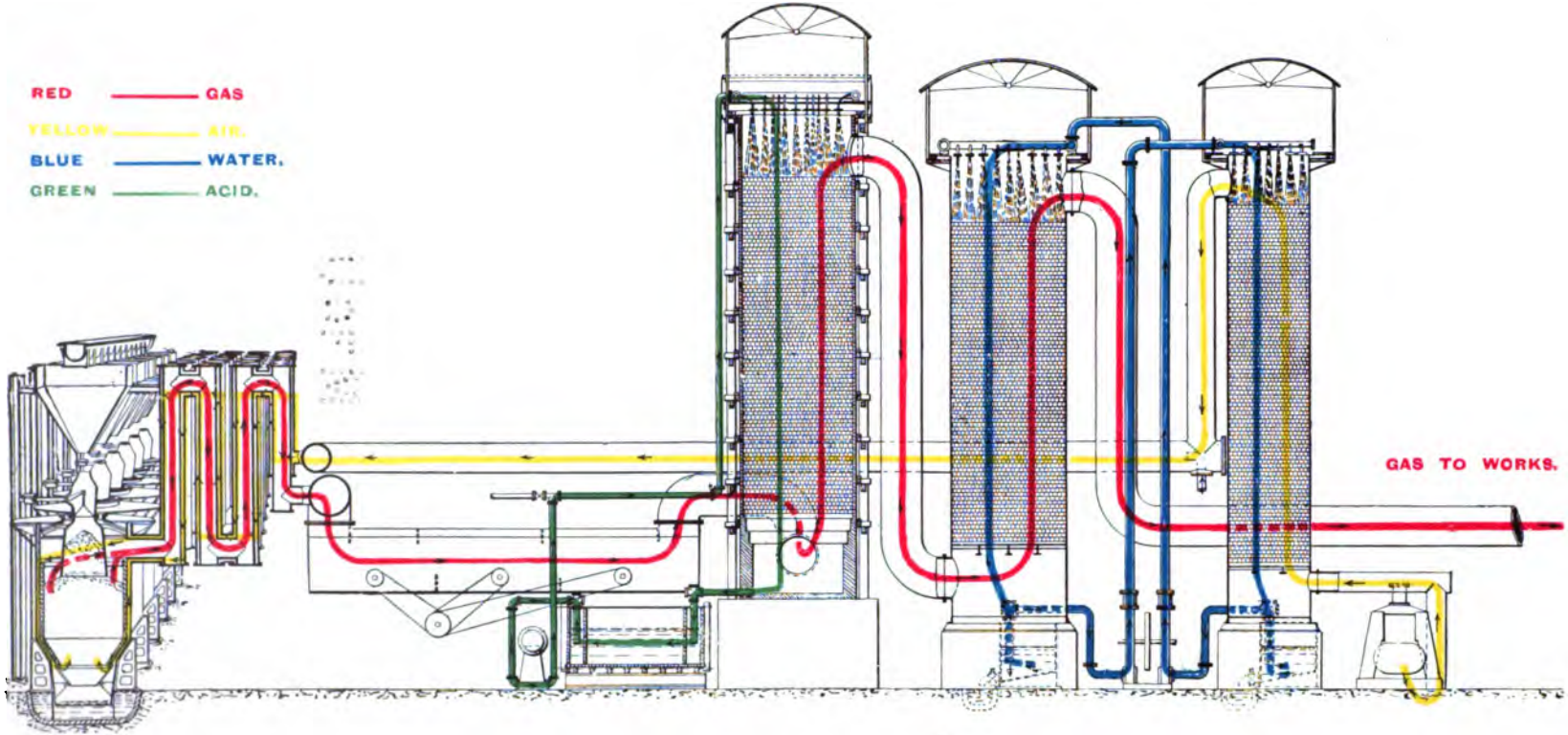

DIAGRAM OF MOND GAS PLANT.

To illustrate Mr. W. H. Waddingham's Paper on "Producer Gas and its Uses."

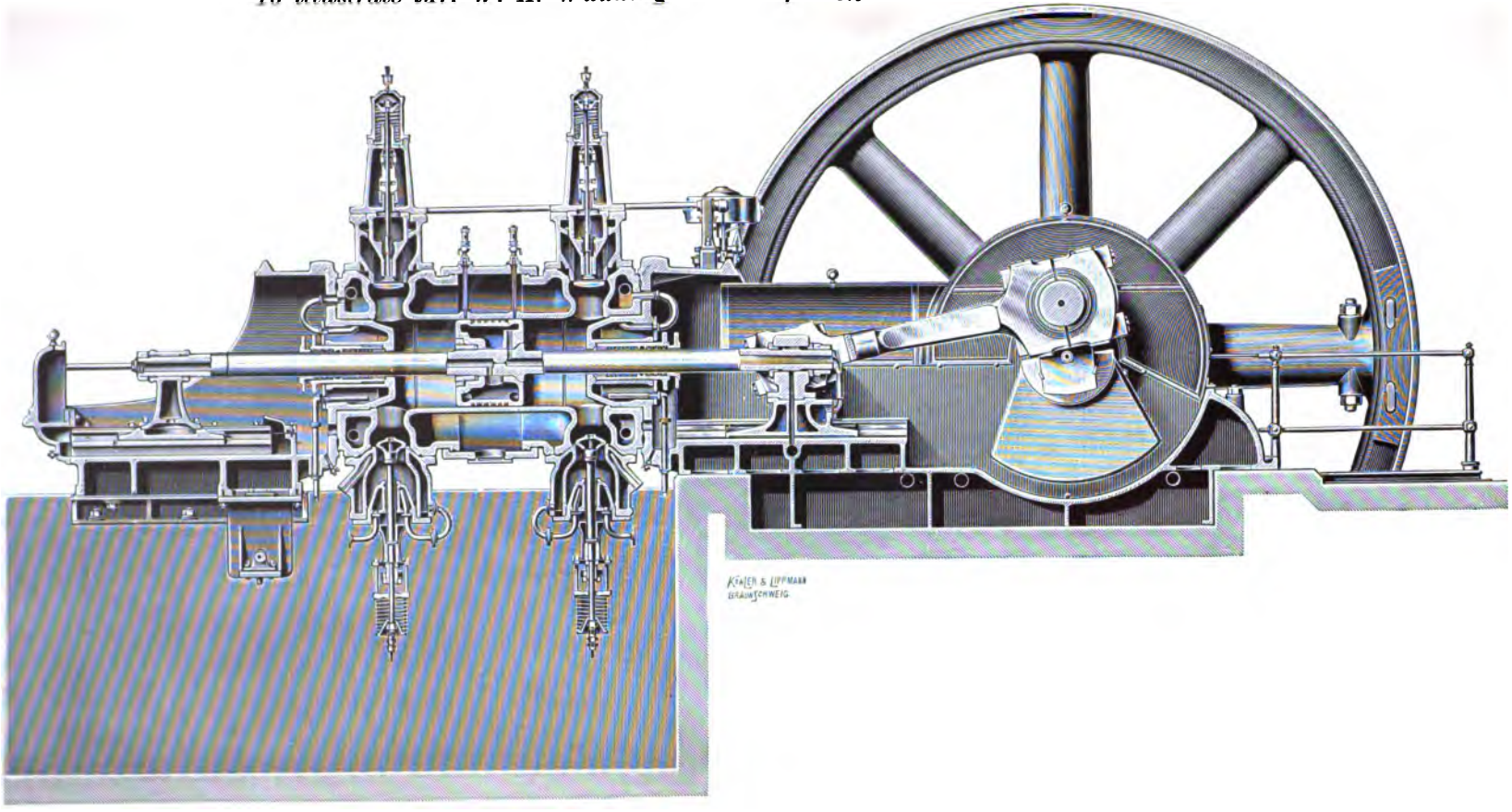

SECTION THROUGH LARGE DEUTZ GAS ENGINE.

To illustrate Mr. W. H. Waddingham's Paper on "Producer Gas and its Uses."

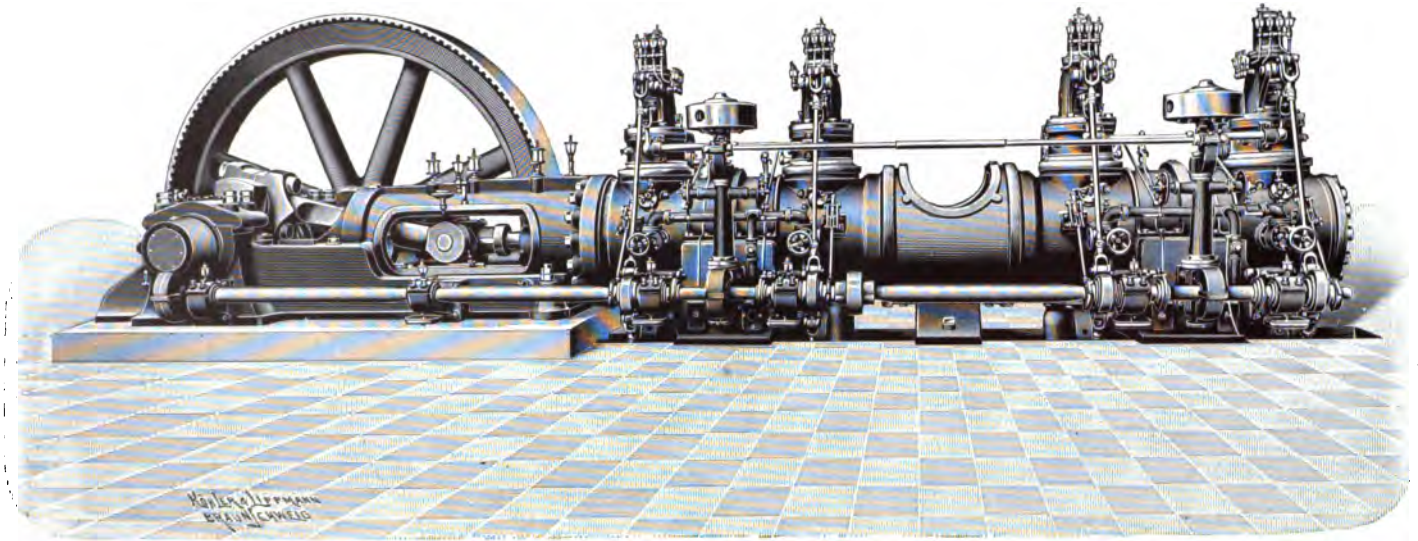

DOUBLE-ACTING TANDEM TWO-CYLINDER ENGINE BY DEUTZ CO.

To illustrate Mr. W. H. Waddingham's Paper on "Producer Gas and its Uses."

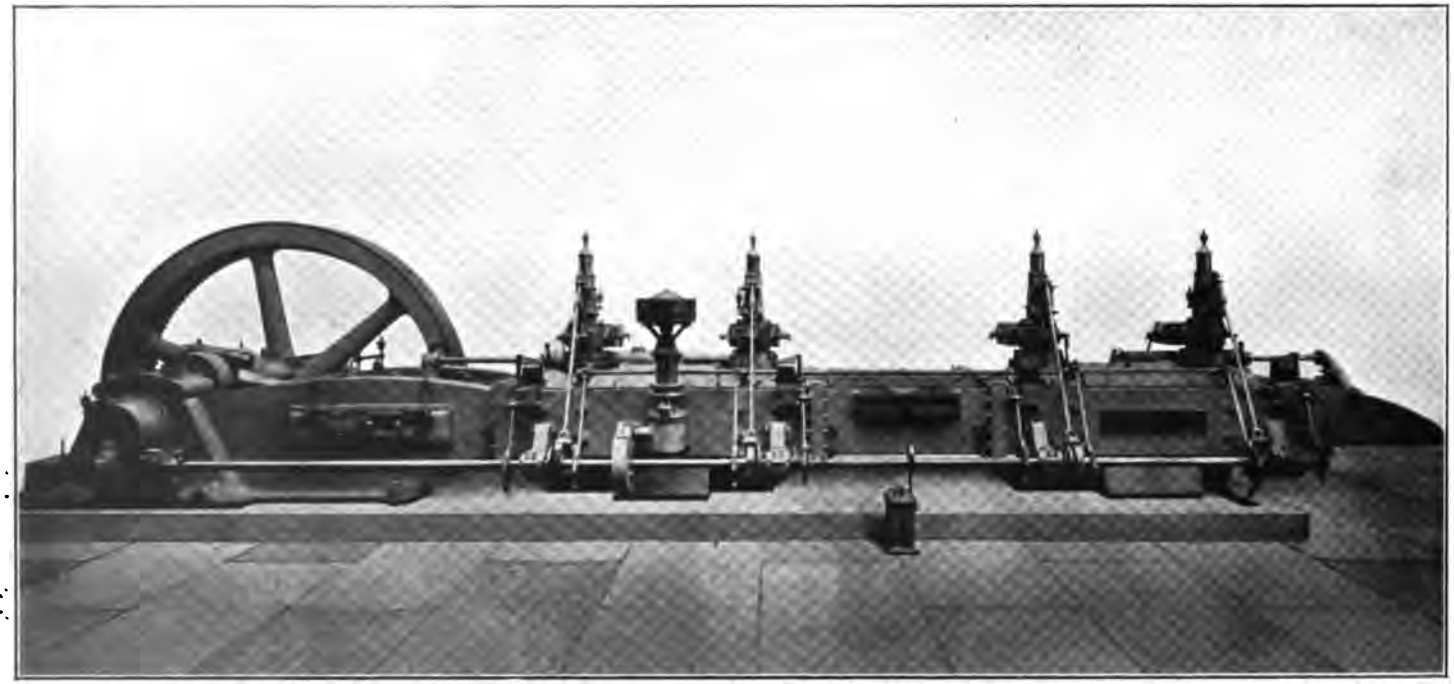

500 Brake Horse Power Double Acting Two Cylinder Gas Engine by Richardsons, Westgarth & Co., Limited.

To illustrate Mr. W. H. Waddingham's Paper on "Producer Gas and its Uses."

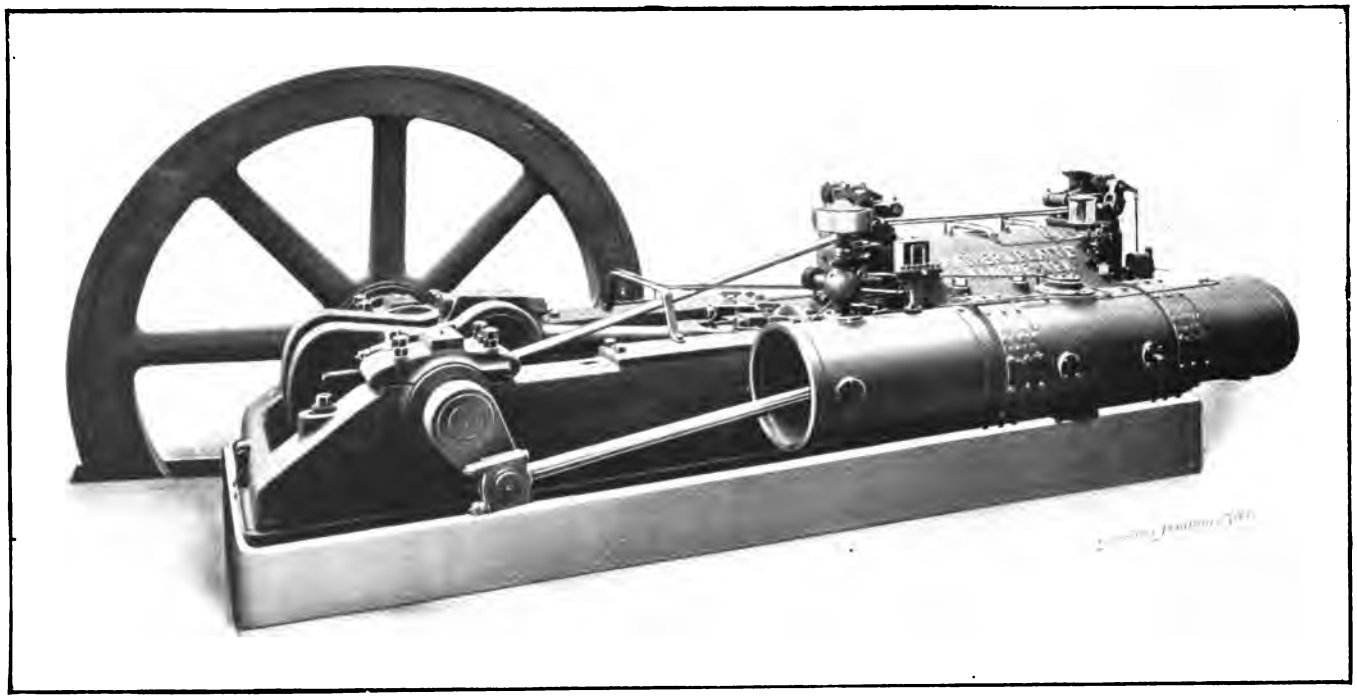

KORTING GAS ENGINE MADE BY MATHER & PLATT, LTD.

To illustrate Mr. W. H. Waddingham's Paper on "Producer Gas and its Uses."

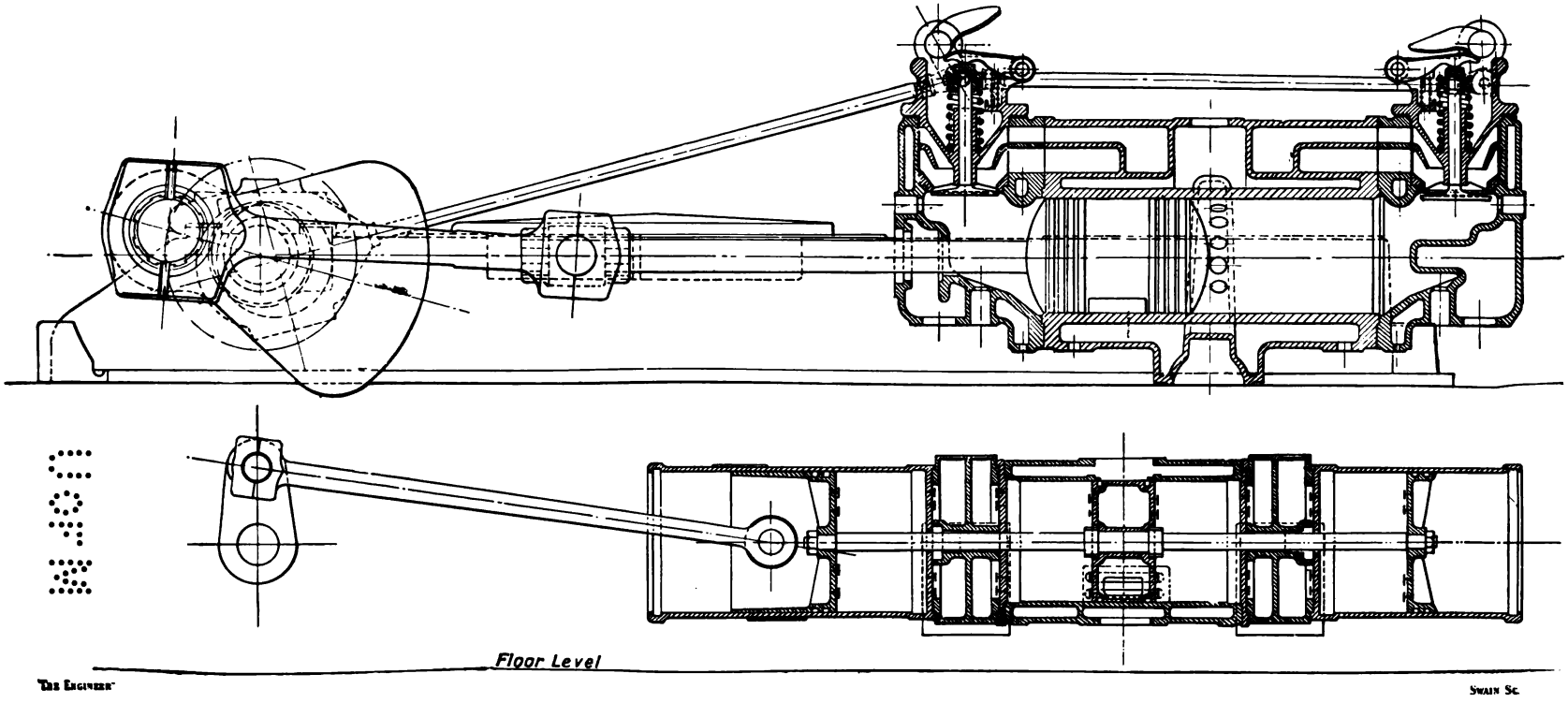

SECTIONS THROUGH KORTING ENGINE CYLINDER AND PUMPS.